Certainty® Series
Cartridge Tape Streamer Subsystem

Cambex

A GOOD PLACE TO PUT YOUR INFORMATION

60467480

CAMBEX

80810-10 CARTRIDGE TAPE STREAMER SUBSYSTEM

HARDWARE MAINTENANCE MANUAL

80810-10 CARTRIDGE TAPE STREAMER SUBSYSTEM

Certainty® Series
Cartridge Tape Streamer Subsystem

Cambex

60467480

CAMBEX

80810-10 CARTRIDGE TAPE STREAMER SUBSYSTEM

HARDWARE MAINTENANCE MANUAL

80810-10 CARTRIDGE TAPE STREAMER SUBSYSTEM

FCC WARNING

This equipment generates and uses radio frequency energy, and if not installed and used properly, that is, in strict accordance with the manufacturer's instructions, may cause interference to radio and television reception. It has been type tested and found to comply with the limits for a Class B computing device in accordance with the specifications in Subpart J of Part 15 of FCC rules, which are designed to provide reasonable protection against such interference in a residential installation. However, there is no guarantee that interference will not occur in a particular installation. If this equipment does cause interference to radio or television reception, which can be determined by turning the equipment off and on, the user is encouraged to try to correct the interference by one or more of the following measures:

- Reorient the receiving antenna
- Relocate the computer with respect to the receiver
- Move the computer away from the receiver
- Plug the computer into a different outlet so that computer and receiver are on different branch circuits

If necessary, the user should consult the dealer or an experienced radio/television technician for additional suggestions. The user may find the following booklet prepared by the Federal Communications Commission helpful:

How To Identify and Resolve Radio-TV Interference Problems

This booklet is available from the U.S. Government Printing Office; Washington, DC 20402; Stock No. 004-000-00345-4.

REVISION RECORD

REVISION	DESCRIPTION
A	Manual released.
02-08-85	
Publication No. 60467480	

REVISION LETTERS I, O, Q, S, X AND Z ARE NOT USED.

Address comments concerning this manual to:

CAMBEX CORPORATION
360 Second Avenue
Waltham, MA 02154

© 1985
by Control Data Corporation
All rights reserved
Printed in the United States of America
All Rights Reserved.

LIST OF EFFECTIVE PAGES

New features, as well as changes, deletions, and additions to information in this manual, are indicated by bars in the margins or by a dot near the page number if the entire page is affected. A bar by the page number indicates pagination rather than content has changed.

PAGE	REV
Cover	A
Title Page	A
ii	A
iii/iv	A
v/vi	A
vii thru xii	A
1-1 thru 1-11	A
2-1 thru 2-43	A
3-1 thru 3-22	A
4-1 thru 4-23	A
5-1 thru 5-18	A
6-1 thru 6-63	A
7-1 thru 7-24	A
A-1	A
A-2	A
B-1	A
B-2	A
C-1 thru C-35	A
Comment Sheet	A
Mailer	A
Rear Cover	-

PAGE	REV

PAGE	REV

PAGE	REV

PAGE	REV

PREFACE

This manual provides operation and maintenance instructions for the CDC® Model 80810-10 Cartridge Tape Streamer Subsystem, which is referred to as the tape storage subsystem. The tape storage subsystem consists of at least one cartridge tape drive, a tape drive formatter circuit card assembly, an enclosure for the cartridge tape drive/formatter card (this enclosure also houses a dedicated power supply and fan assembly), tape storage subsystem attachment feature, and interface cable assemblies. The tape storage subsystem is designed and engineered to allow attachment of the tape cartridge drive to IBM Series/1 computing systems.

The tape storage subsystem support models IBM Series/1 mainframe 4952, 4953, 4954, 4955, and 4956. The tape storage subsystem is not compatible with other types of Series/1 mainframes or any other equivalent computing systems.

This manual is intended for operators, system analysts, programmers, system maintenance personnel, and other personnel who are responsible for operating, programming, or maintaining a Series/1 computing system that is configured using the tape storage subsystem for data storage and retrieval purposes.

Proper use of this manual assumes a familiarity with IBM Series/1 mainframes and associated architectures. In the case of programmers, the manual also assumes the user has a working knowledge of Series/1 supervisor and data-management software.

The following IBM manuals contain information complementary to the information presented in this manual:

Title	Publication Number
IBM Series/1 Physical Planning Manual	GA34-0029
IBM Series/1 User's Attachment Manual	GA34-0033

For ordering information on any of the referenced IBM Series/1 publications, contact your IBM representative or the IBM branch office in your area.

The following Control Data manuals provide additional reference and maintenance information related to the tape storage subsystem.

Title	Publication Number
CDC® Standalone Utilities User's Guide, Version 4.0	60466020
CDC® Model 80810-10 Cartridge Tape Streamer Subsystem Reference Manual	60467470

The CDC publications listed may be ordered from:

Control Data Corporation
Literature and Distribution Services
304 North Dale Street
St. Paul, Minnesota 55103

DISCLAIMER

This product is intended for use only as described in this publication. Control Data cannot be responsible for the improper functioning of undescribed features or undefined parameters.

CONTENTS

1. GENERAL DESCRIPTION 1-1

Functional and Operational Description 1-3
- Attachment Feature Card 1-4
- Tape Cartridge Drive 1-5
  - Drive Microprocessor 1-8
  - Capstan Motor 1-8
  - Head Carriage and Stepper Motor Assembly 1-8
  - Read/Write Head 1-8
  - Tapehole Sensors 1-8
- Formatter Circuit Card Assembly 1-9

Subsystem Characteristics 1-11

2. OPERATION 2-1

Operating Overview 2-1
- Controls and Indicators 2-1
- Operating Procedures 2-2
  - Power On Procedure 2-3
  - Power Off Procedure 2-3
  - Tape Cartridge Loading/Unloading 2-3
- Operating Considerations and Precautions 2-5

Programming 2-6
- Attachment Feature Card Word Formatting 2-6
- Attachment Feature Card Responses to Series/1 Processor Commands 2-7
  - DPC Commands 2-7
- Series/1 Processor/Tape Storage Subsystem Attachment Feature I/O Operations 2-8
  - DPC Word 0 - Control Word 2-10
  - Start-DCB Operation 2-12
    - Restore 2-12
    - Re-tension 2-12
    - Read File Mark 2-12
    - Erase Tape 2-12
    - Write File Mark 2-13
    - Read Tape 2-13
    - Write Tape 2-14
  - Basic Condition Codes 2-14
    - Condition Code 0 - Device Not Attached 2-15
    - Condition Code 1 - Busy 2-15
    - Condition Code 2 - Busy After Reset 2-16
    - Condition Code 3 - Command Reject 2-16
    - Condition Code 4 2-16
    - Condition Code 5 - Interface Data Check 2-16
    - Condition Code 6 2-16
    - Condition Code 7 - Satisfactory 2-16

Interrupt Condition Codes 2-17
Condition Codes 0, 1, 5, 6, and 7 2-17
Condition Code 2 - Exception 2-17
Condition Code 3 - Device End 2-18
Condition Code 4 - Attention 2-18
Interrupt Identification 2-18
Status Words 2-18
Cycle-Steal Status Word 0 - Residual Address 2-18
Cycle-Steal Status Word 1 - Tape Unit Status 2-18
Cycle-Steal Status Word 2 2-20
Status Bytes 2 and 3 2-22
Cycle-Steal Status Word 3 2-25
Cycle-Steal Status Word 4 2-25
Status After Resets 2-25
Power-On Reset 2-25
Halt I/O, System, and Device Resets 2-25
Start Diagnostics 2-25
Start Diagnostic 1 Command 2-25
Start Diagnostic 2 Command 2-26
Start Diagnostic 3 Command 2-26
Tape Cartridge Drive/Formatter Data Formatting 2-27
Recording Code 2-27
Data Block Format 2-28
Preamble 2-29
Data Block Marker 2-29
Data Block 2-29
Block Address 2-29
Optional Control Block Data Field 2-30
Cyclical Redundancy Check Group 2-33
Postamble 2-33
File Mark Block Format 2-33
Rewritten Blocks 2-34
Underrun, End-of-File, or End-of-Track 2-35
Forced Streaming 2-36
End of Recorded Data 2-36
Recorded Tracks at Beginning and End of Tape 2-36
Track Reference Burst 2-36
Even-Numbered Tracks 2-36
Odd-Numbered Tracks 2-37
Tape Cartridge Drive/Formatter Commands 2-37
Power On/Reset 2-38
READ STATUS Command (1100 0000) 2-38
RESTORE Command (0010 0001) 2-38
RE-TENSION Command (0010 0100) 2-38
ERASE Command (0010 0010) 2-38
WRITE Command (0100 0000) 2-39
READ Command (1000 0000) 2-39
WRITE FILE MARK Command (0110 0000) 2-40
READ FILE MARK Command (1010 0000) 2-40
Tape Cartridge Drive/Formatter Status Descriptions 2-40
Status Byte 1 2-41
Status Byte 0 2-42
Status Bytes 2 and 3 2-42
Status Bytes 4 and 5 2-43

3. INSTALLATION AND CHECKOUT 3-1

Tools Required for Installation 3-1
Packing 3-1
Unpacking 3-2
    Unpacking the Tape Cartridge Drive 3-2
    Unpacking the Tape Storage Subsystem Attachment Feature Card 3-3
Primary or Initial Installation 3-4
    Moving FDD 3-4
    Tape Cartridge Drive Enclosure Installation in the Series/1 Cabinet 3-5
    Attachment Feature Card Installation 3-6
Checkout 3-14
    CDC BASIC Diskette Configuration 3-14
    Attachment Feature Card and Tape Cartridge Drive Checkout 3-21

4. PRINCIPLES OF OPERATION 4-1

Tape Cartridge Drive General Principles of Operation 4-1
    Tape Cartridge Drive 4-3
        Reference Locators 4-3
        In-Position Sensor 4-3
        File Protect 4-4
        Mirror Mechanism 4-4
        Cartridge Door and Capstan Wheel 4-4
    Sensor Assembly 4-4
    Head Stepper Motor Assembly 4-4
    Magnetic Head 4-5
    Microprocessor 4-7
Formatter General Principles of Operation 4-8
Subsystem Principles of Operation 4-9
Subsystem Signals and Related Timing 4-10
    Capstan Motor Control 4-11
    Tape Positioning 4-11
    Track and Head Selection 4-13
    Cartridge-In-Place 4-13
    Reset 4-13
    Unsafe 4-13
    Tachometer Pulses 4-13
    Write and Erase Controls 4-13
    Read Data 4-13
Interface Timing 4-15
    Reset Timing 4-16
    READ STATUS Command Timing 4-17
    SELECT Command Timing 4-18
    POSITION Command Timing 4-19
    WRITE DATA Command Timing 4-20
    READ DATA Command Timing 4-20
    WRITE FILE MARK Command Timing 4-21
    READ FILE MARK Command Timing 4-22
Tape Cartridge Tracks 4-23
    Number and Use of Tracks 4-23
    Reference Plane 4-23
    Track Center Line Locations 4-23

5. DIAGRAMS 5-1

6. MAINTENANCE 6-1

Maintenance Philosophy 6-1
Safety Instructions 6-1
Recommended Tools and Test Equipment 6-2
Preventive Maintenance 6-2
    Inspection 6-4
    Head Cleaning 6-4
Tape Storage Subsystem Troubleshooting 6-6
    Running Self-Test Diagnostics 6-7
    Error Abort Messages 6-9
    SAMs 6-11
        SAM 5900 - Channel Interface Test 6-12
        SAM 5901 - Attachment and Z80 Test 6-15
        SAM 5903 - Tape Unit Test 6-20
        SAM 5908 - Erase Tape Test 6-25
        SAM 5909 - Re-tension Tape Test 6-26
FRU Removal and Replacement 6-28
    Tape Cartridge Drive/Formatter and Interface Cable Assembly Removal and Replacement 6-29
        Tape Cartridge Drive/Formatter and Interface Cable Assembly Removal 6-29
        Tape Cartridge Drive/Formatter and Interface Cable Assembly Replacement 6-29
    Attachment Feature Card Removal and Replacement 6-30
    Tape Cartridge Drive Enclosure Top Cover 6-30
        Tape Cartridge Drive Enclosure Top Cover Removal 6-30
        Tape Cartridge Drive Enclosure Top Cover Replacement 6-31
    Tape Cartridge Drive 6-33
        Tape Cartridge Drive Removal 6-33
        Tape Cartridge Drive Replacement 6-34
    Power Supply Assembly 6-35
        Power Supply Assembly Removal 6-35
        Power Supply Assembly Replacement 6-36
    Fan 6-37
        Fan Removal 6-37
        Fan Replacement 6-38
    Power Entry Module 6-38
        Power Entry Module Removal 6-38
        Power Entry Module Replacement 6-40
    Line Filter 6-40
        Line Filter Removal 6-40
        Line Filter Replacement 6-41
    Power Switch Assembly 6-42
        Power Switch Assembly Removal 6-42
        Power Switch Assembly Replacement 6-44
Returning Defective Modules 6-45
Diagnostics 6-45
    Configurator Table Information 6-45
        Changing Configurator Table Using Operator/Programmer Panel 6-45
        Configure System (Option 0C) Using Operator/Programmer Panel 6-47
        Configurator Table Entries 6-48
        Entry 00 (System Entry) 6-48
        Entries 01-XX (Device Entries) 6-50
        Configurator Table Layout 6-52

Common Halt List 6-53
Diagnostic Control Program (DCP) Halts 6-53
Configurator Halts 6-54
MAP Diagnostic Integration (MDI) Halts 6-60
Commands 6-60
Single-Character Commands (No Data) 6-60
Commands Using a Program ID (Commands B and C) 6-62
Command to Set Option Bits On (Command D) 6-62
Command to Enter Variable Data (Reply to a Program), (Command F) 6-63

7. PARTS LIST 7-1

APPENDIXES

A. ABBREVIATIONS AND ACRONYMS A-1
B. GLOSSARY OF TERMS B-1
C. EDX UTILITY PROGRAM C-1

FIGURES

1-1 Model 80810-10 Cartridge Tape Streamer Subsystem 1-1
1-2 Tape Storage Subsystem Installed in the IBM Series/1 Enclosure 1-2
1-3 Table-Top Version of Tape Storage Subsystem 1-3
1-4 General Physical Relationship of the Elements That Make Up the Tape Storage Subsystem 1-4
1-5 Tape Storage Subsystem Attachment Feature 1-5
1-6 Tape Storage Subsystem Attachment Feature LSI Channel Logic Block Diagram 1-6
1-7 Tape Storage Subsystem Attachment Feature Microprocessor Logic Block Diagram 1-7
1-8 Tape Cartridge Drive 1-9
1-9 Formatter Block Diagram (QIC-02/QIC-24 Interface) 1-10
2-1 Write-Protect Feature 2-2
2-2 Tape Cartridge Loading 2-4
2-3 Tape Cartridge Unloading 2-4
2-4 Immediate Device Control Block Word Formats 2-6
2-5 Interrupt Word Format 2-7
2-6 Tape Storage Subsystem Data Block Format 2-28
2-7 Data Block Marker Pattern 2-29
2-8 Block Address Format 2-32
2-9 File Mark Block Format Pattern 2-33
2-10 Standard Sequence for Rewritten Blocks 2-34
2-11 Block Format for Underrun, End-of-File, or End-of-Track 2-35
2-12 Long Postamble Block Format 2-35
2-13 Forced Streaming Block Format 2-36
3-1 Attachment Feature Card Selection Switches 3-8
3-2 Adjustment Potentiometers and Attachment Cable 3-10
3-3 Backpanel Pin Configuration 3-11
3-4 Minimum Load Switch, Series/1 Model 4952-A 3-12
3-5 Equipment ID Plate and FCO Log Placement 3-13
3-6 3101 Display Switch Settings During Initialization 3-16

4-1	Tape Cartridge Drive Simplified Block Diagram	4-2
4-2	Magnetic Head Layout	4-5
4-3	Motion Control Timing	4-11
4-4	Tape Hole Positioning	4-12
4-5	Write and Erase Controls	4-14
4-6	Read Data	4-15
4-7	Reset Timing Diagram	4-16
4-8	READ STATUS Command Timing Diagram	4-17
4-9	SELECT Command Timing Diagram	4-18
4-10	POSITION Command Timing Diagram	4-19
4-11	WRITE DATA Command Timing Diagram	4-20
4-12	READ DATA Command Timing Diagram	4-20
4-13	WRITE FILE MARK Command Timing Diagram	4-21
4-14	READ FILE MARK Command Timing Diagram	4-22
4-15	Track Center Line Locations	4-23
6-1	Tape Cartridge Drive Release Tab	6-5
6-2	SAM Format	6-11
6-3	Tape Cartridge Drive Enclosure FRU Locations	6-28
6-4	Removal of Tape Cartridge Drive Enclosure Top Cover	6-31
6-5	Tape Cartridge Drive Cable Connections and Support Frame	6-33
6-6	Tape Cartridge Drive Attached to Tape Cartridge Drive Enclosure	6-34
6-7	Tape Cartridge Drive Power Supply Assembly	6-35
6-8	Tape Cartridge Drive Enclosure Fan Assembly	6-37
6-9	Tape Cartridge Drive Enclosure Power Entry Module	6-39
6-10	Tape Cartridge Drive Enclosure Line Filter Assembly	6-41
6-11	Power Switch Assembly Front Cover	6-42
6-12	Power Switch Assembly Guard Plates	6-43
6-13	Power Switch Assembly On/Off Switch	6-43

TABLES

1-1	Tape Storage Subsystem Physical Characteristics	1-11
1-2	Tape Storage Subsystem Electrical Characteristics	1-11
2-1	DPC Command Summary	2-9
2-2	I/O Operations	2-11
2-3	Condition Codes Presented Following DPC Command Execution	2-15
2-4	Condition Codes Reported at Interrupt Presentation Time	2-17
2-5	Interrupt Status Byte	2-19
2-6	Cycle-Steal Status Word 1 Summary	2-20
2-7	Exception Status Summary	2-22
2-8	Recording Code	2-28
2-9	Optional Control Block Data Field Summary	2-31
2-10	Attachment Feature/Formatter Command Summary	2-37
2-11	Tape Storage Subsystem Status Bytes	2-40
3-1	IBM/CDC Device Type Assignments	3-20
4-1	Tape Cartridge Drive Interface Connector Summary	4-3
4-2	Signal Description	4-6
4-3	Capstan Motor Logic	4-9
4-4	Tape Position Code Signal Summary	4-12
6-1	Recommended Tools and Test Equipment	6-3
6-2	Tape Storage Subsystem Diagnostics	6-4
6-3	Tape Storage Subsystem Troubleshooting	6-27
6-4	System Entry Format	6-48
6-5	Device Entry Format	6-51

GENERAL DESCRIPTION 1

The CDC Model 80810-10 Cartridge Tape Streamer Subsystem, which is referred to as the tape storage subsystem, provides up to 60 megabytes (MBs) of on-line tape storage for IBM Series/1 host computing systems. IBM Series/1 computing systems supported by the tape storage subsystem include mainframe models 4952, 4953, 4954, 4955, and 4956. Other IBM mainframes, as well as other competitive OEM mainframes, are not compatible with the tape storage subsystem.

The tape storage subsystem is conveniently mounted in the Series/1 enclosure. As an on-line subsystem, the tape cartridge drive provides a real-time tape storage and retrieval capability for user applications. The subsystem (see figure 1-1) is designed to support the QIC-02/QIC-24 intelligent interface.

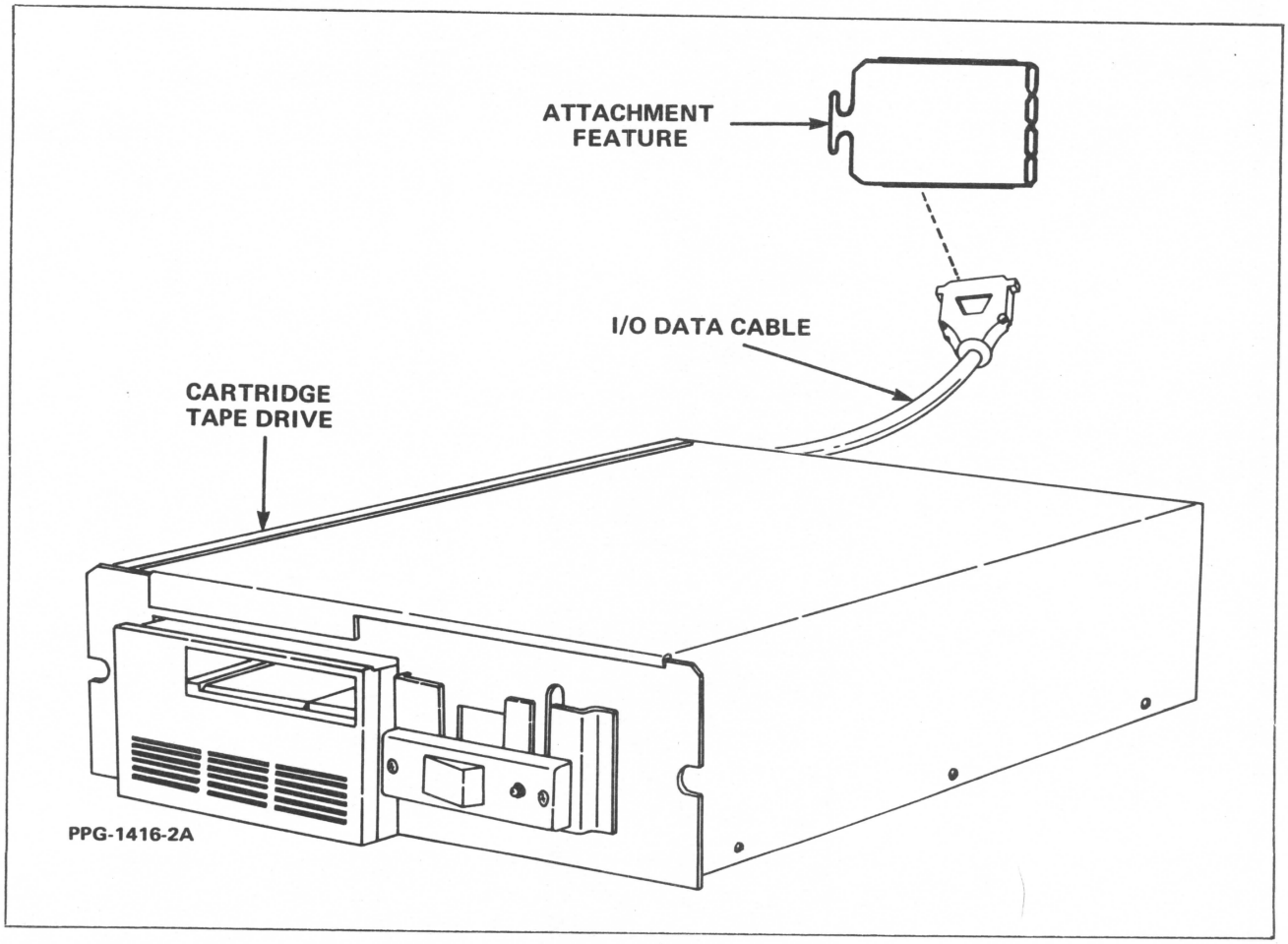

Figure 1-1. Model 80810-10 Cartridge Tape Streamer Subsystem

The tape storage subsystem consists of a 1/4-inch wide tape cartridge drive, an attachment feature (a Series/1 I/O channel interface circuit card assembly), and applicable interconnecting I/O cable assemblies. The tape cartridge drive, along with a dedicated subsystem power supply, formatter circuit card assembly, and fan assembly, is housed in a self-contained enclosure that mounts in the Series/1 cabinet as shown in figure 1-2. Alternatively, you can table mount the tape cartridge drive (figure 1-3). The tape storage subsystem attachment feature is mounted in either the Series/1 processor logic chassis or in the Series/1 I/O expansion chassis.

You may use the tape storage subsystem in a Series/1 mainframe with other peripheral devices, such as the CDC Model 80220-10 WREN Disk Storage Subsystem and/or compatible 5-1/4-inch flexible disk drives. If this is the case, note that each peripheral device must have a dedicated attachment feature.

For the tape storage subsystem to operate with the Series/1 processor, you must configure the Series/1 mainframe with a flexible disk drive. Tape storage subsystem utilization also requires a programmer's panel.

The storage media for the subsystem consists of a standard ANSI X3.55-type, 600-foot long tape cartridge (3M type DC600A or equivalent). The drive can record 60 MBs of data, using a nine-track format.

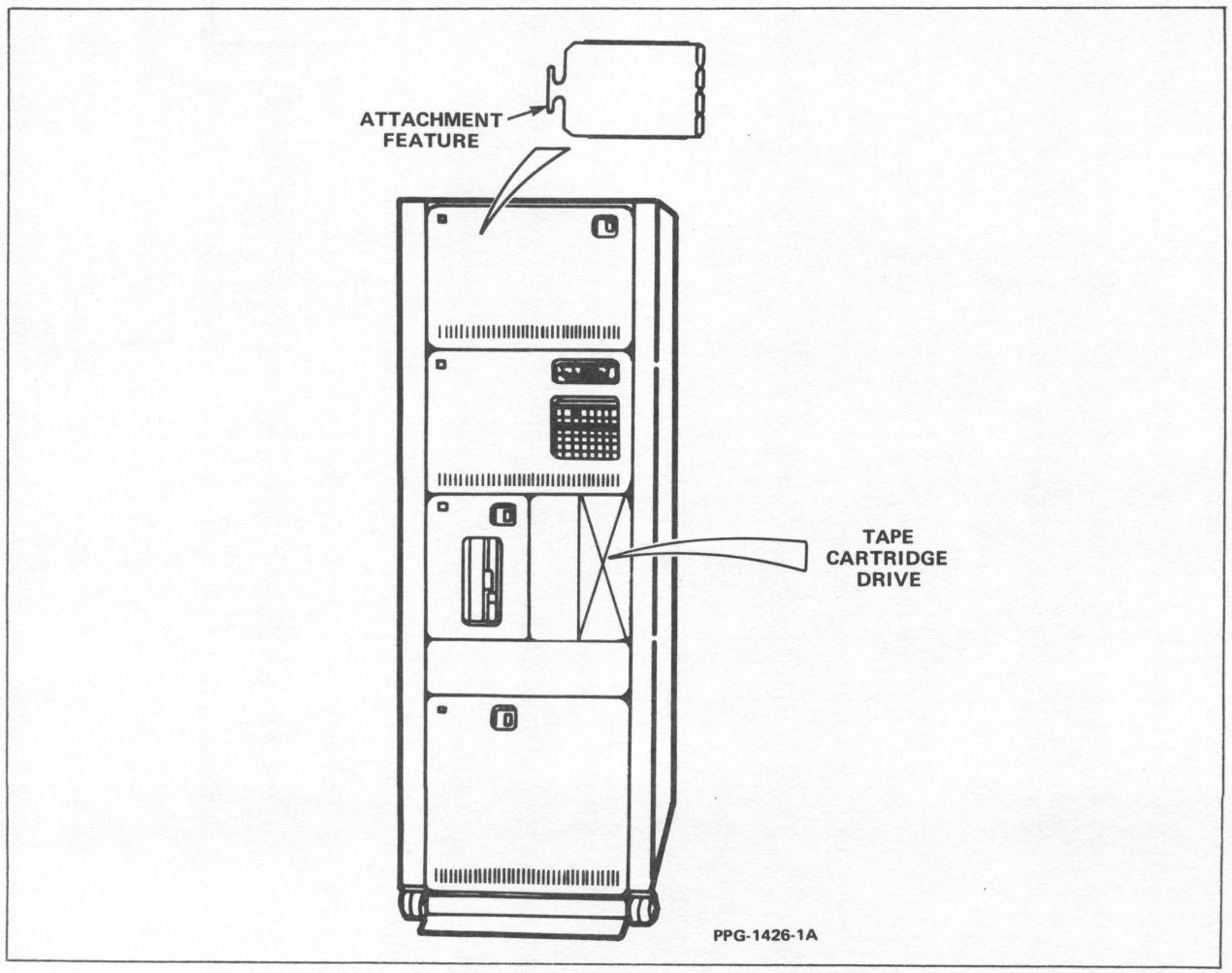

Figure 1-2. Tape Storage Subsystem Installed in the IBM Series/1 Enclosure

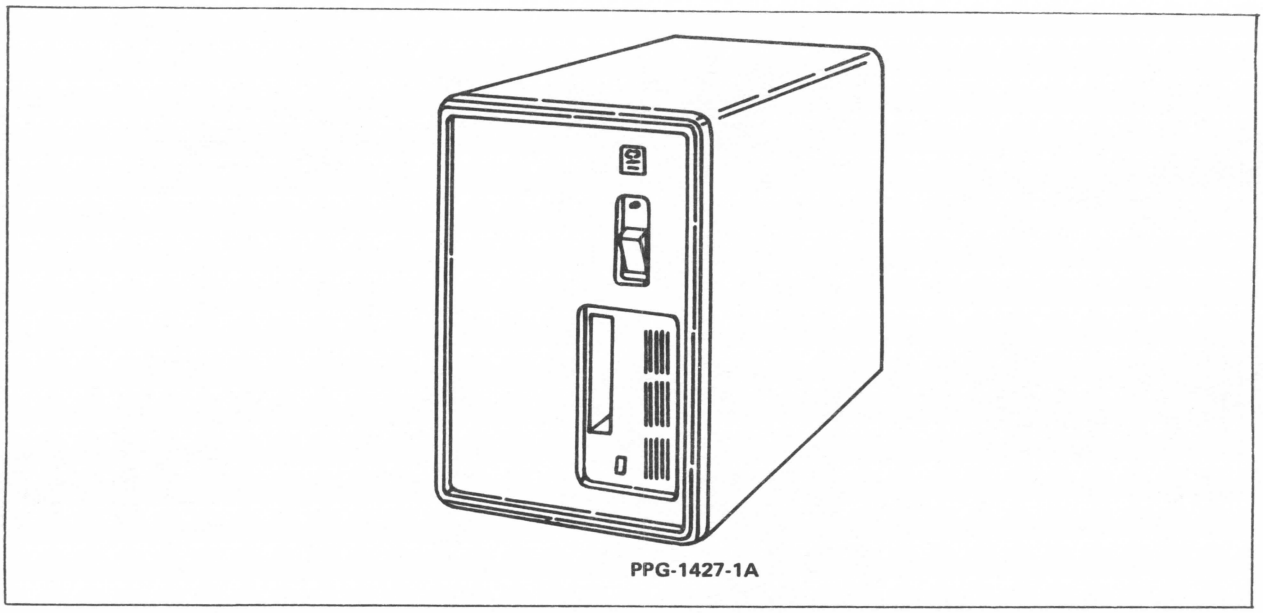

Figure 1-3. Table-Top Version of Tape Storage Subsystem

The remainder of this section provides functional and operational descriptions and physical, electrical, and environmental specifications related to the tape storage subsystem. The three main parts of the subsystem are as follows:

- Attachment feature
- Tape cartridge drive
- Formatter circuit card assembly

FUNCTIONAL AND OPERATIONAL DESCRIPTION

The functional and operational descriptions in the following paragraphs provide general information concerning the performance and operation of the tape storage subsystem. Refer to figure 1-4 for an illustration showing the general physical relationships between the various subsystem elements.

The tape storage subsystem responds to commands issued by the Series/1 host processor. The attachment feature provides basic command recognition, interpretation, and response. Subsystem operation is performed in conjunction with the tape cartridge drive formatter circuit card and the tape cartridge drive itself. The tape cartridges used have an unformatted storage capacity of 60.0 MBs. The tape cartridge drive formatter circuit card provides the subsystem with the multiplexing, tape cartridge data formatting and buffering, cyclical redundancy checking (CRC), and data scanning required for command recognition and execution.

The following paragraphs describe each major part of the tape storage subsystem (attachment feature, tape cartridge drive, and tape cartridge drive formatter circuit card).

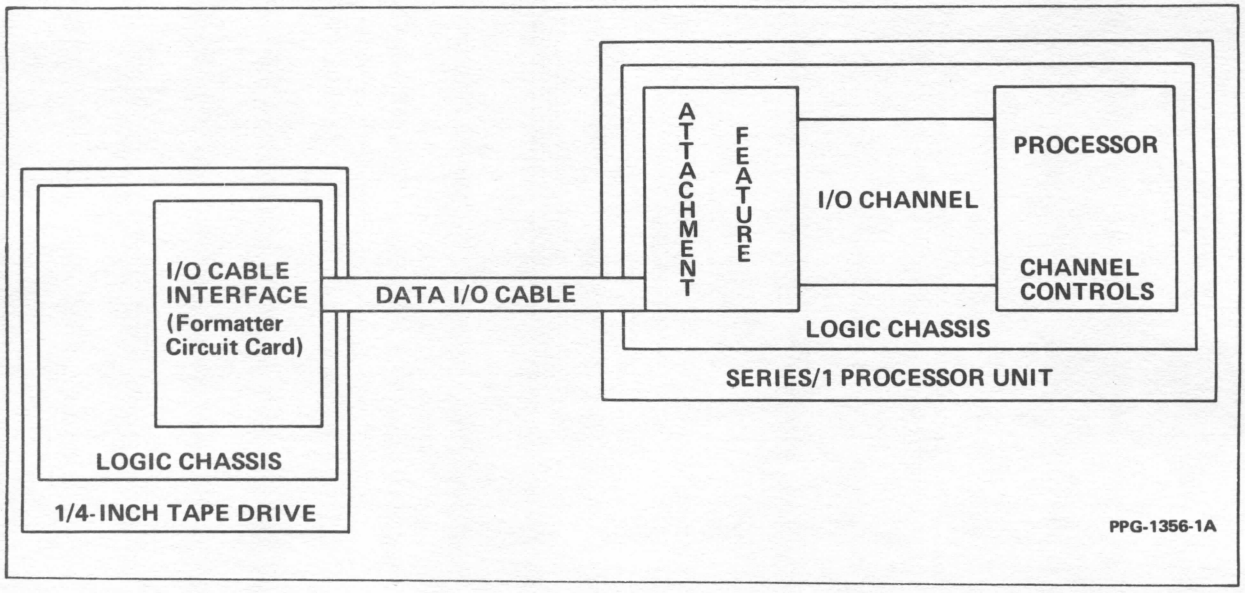

Figure 1-4. General Physical Relationship of the Elements That Make Up the Tape Storage Subsystem

ATTACHMENT FEATURE CARD

The tape storage subsystem attachment feature card (figure 1-5) is a circuit card assembly that incorporates microprocessor (Z80A) and LSI channel logic. The card provides the interface between the tape cartridge drive/formatter and the Series/1 I/O channel by servicing commands received from the Series/1 processor. The card initiates the transfer of appropriate signals, data, and status information to and from the tape cartridge drive/formatter. Data transfers from the Series/1 I/O channel are handled in the cycle-steal mode. Refer to figures 1-6 and 1-7 for functional block diagrams illustrating the LSI channel and microprocessor logic used by the attachment feature.

Commands from the Series/1 processor are executed either under direct program control (DPC) by the processor, or under DPC and in cycle-steal mode. Under DPC, the commands are received and executed as processor instructions and do not require the card to send an interrupt request to the processor upon completion of the command operation. Commands performed under DPC are PREPARE, DEVICE RESET, and READ DEVICE ID.

Commands operating in the cycle-steal (CS) mode are received under DPC but are executed in the CS mode. In the CS mode, the data transfer requested by a command is executed by stealing cycles from the processor while the processor is executing other instructions. This, in effect, results in an overlapping of processing and I/O operations. During command execution in CS mode, the card issues a busy signal to inform the Series/1 processor that the tape cartridge drive is active. When the command has been executed and the data transfer operation completed, the card presents an interrupt request to the Series/1 processor. Commands that use the CS mode are START, START CYCLE-STEAL STATUS, START DIAGNOSTIC 1, START DIAGNOSTIC 2, and START DIAGNOSTIC 3.

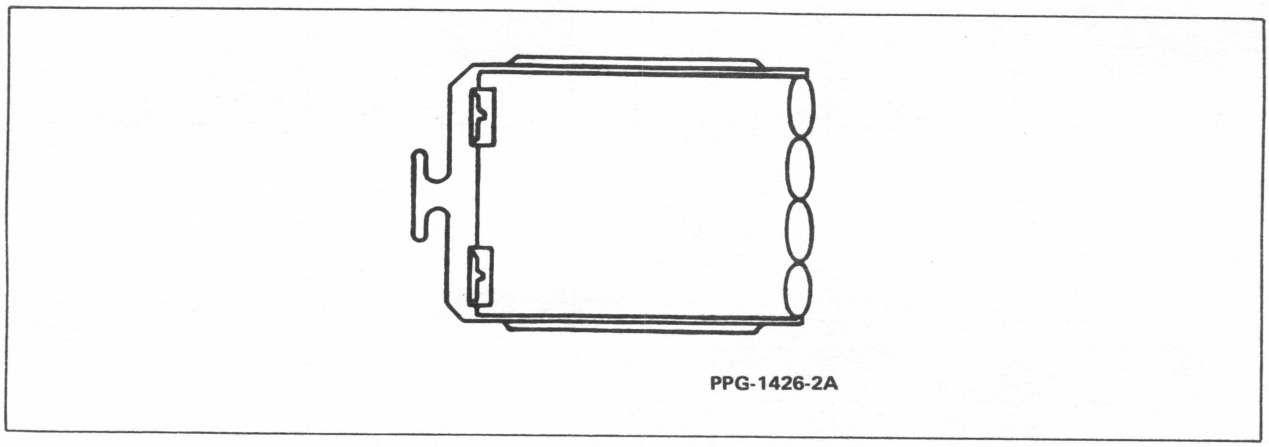

Figure 1-5. Tape Storage Subsystem Attachment Feature

TAPE CARTRIDGE DRIVE

The tape cartridge drive (see figure 1-8) is designed to interface with and provide peripheral storage capabilities for data processing systems configured using the Series/1 mainframe. The tape cartridge drive is a rack-mounted, tape storage and retrieval device that has a storage capacity of 60 MBs. The maximum data transfer rate for the tape cartridge drive is 90 KBytes/second.

The tape cartridge drive consists of the following major elements:

- Formatter circuit card assembly that enables the QIC-02/QIC-24 intelligent interface
- Microprocessor
- Head carriage and stepper motor assembly
- Read/write head assembly with tape cleaners
- Capstan motor
- Tapehole sensor block assembly

All elements and control electronics for the tape cartridge drive are conveniently mounted on the drive's die cast aluminum deck, which is enclosed in a 5.75-inch wide, 3.25-inch high, and 8.0-inch deep envelope.

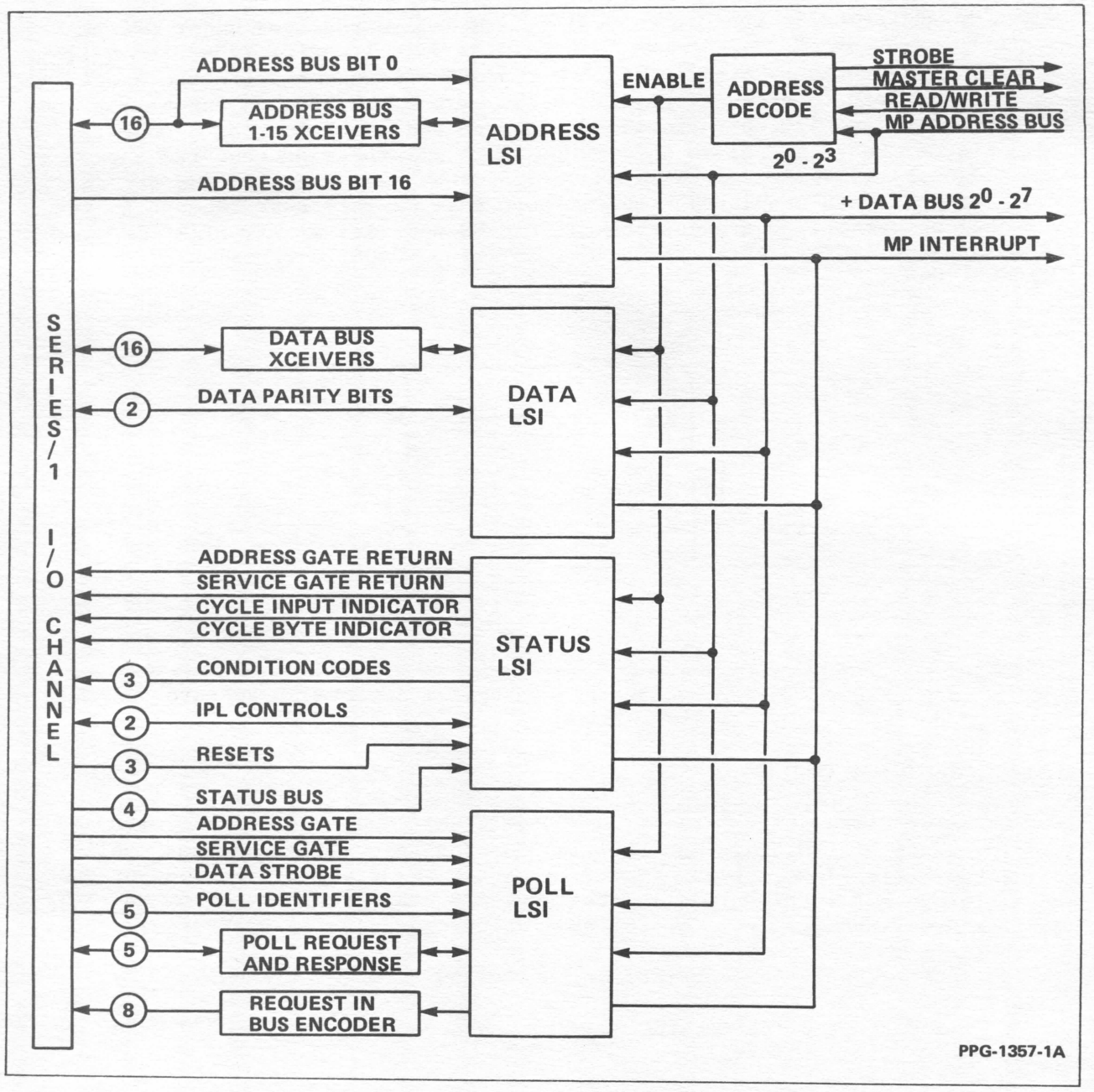

Figure 1-6. Tape Storage Subsystem Attachment Feature
LSI Channel Logic Block Diagram

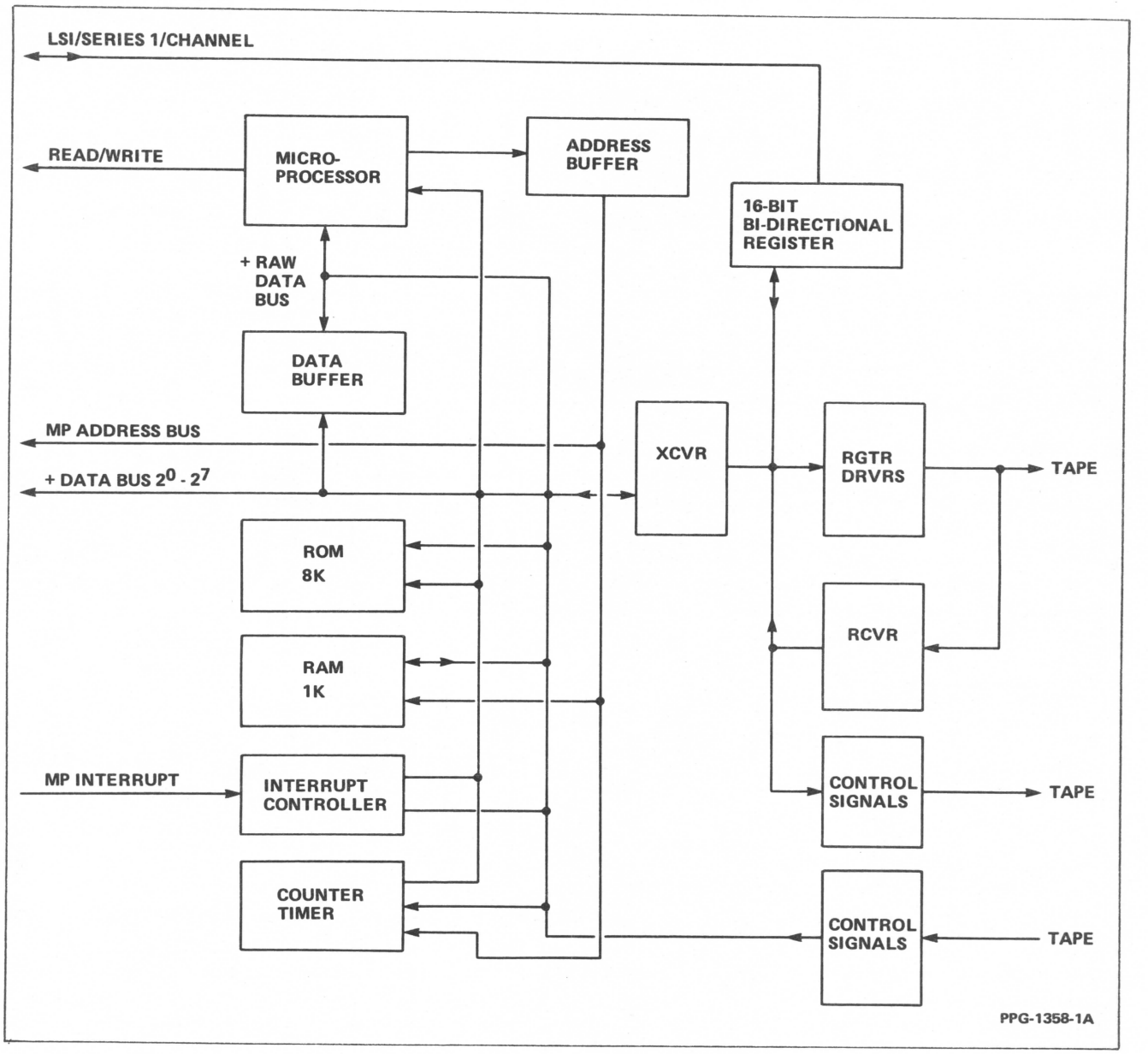

Figure 1-7. Tape Storage Subsystem Attachment Feature
Microprocessor Logic Block Diagram

The following paragraphs provide brief descriptions of each of the major elements of the tape cartridge drive.

Drive Microprocessor

The drive microprocessor is the heart of the tape cartridge drive. The microprocessor maintains control of the drive stepping mechanism and drive motor and is also used to decode commands sent by the attachment feature.

Capstan Motor

The drive's microprocessor controls the capstan motor. A signal derived from a tachometer controls tape cartridge speed. With such control, instantaneous speed variation is held within ± 7 percent and long-term speed variation is limited to ± 3 percent.

Head Carriage and Stepper Motor Assembly

The stepper motor lead screw positioning mechanism accomplishes positioning of the head to the desired track. The drive's microprocessor generates the drive signal to the stepper motor.

Read/Write Head

Reading and writing on the tape in the 9-track format is performed by a two-channel serpentine recording head arranged with "read after write" poles with a full-track erase bar.

Tapehole Sensors

The detection system for end-of-tape (EOT), beginning-of-tape (BOT), load point (LP), and early warning (EW) holes use optical sensor assemblies, the outputs of which are synchronously clocked into the tape cartridge drive's microprocessor.

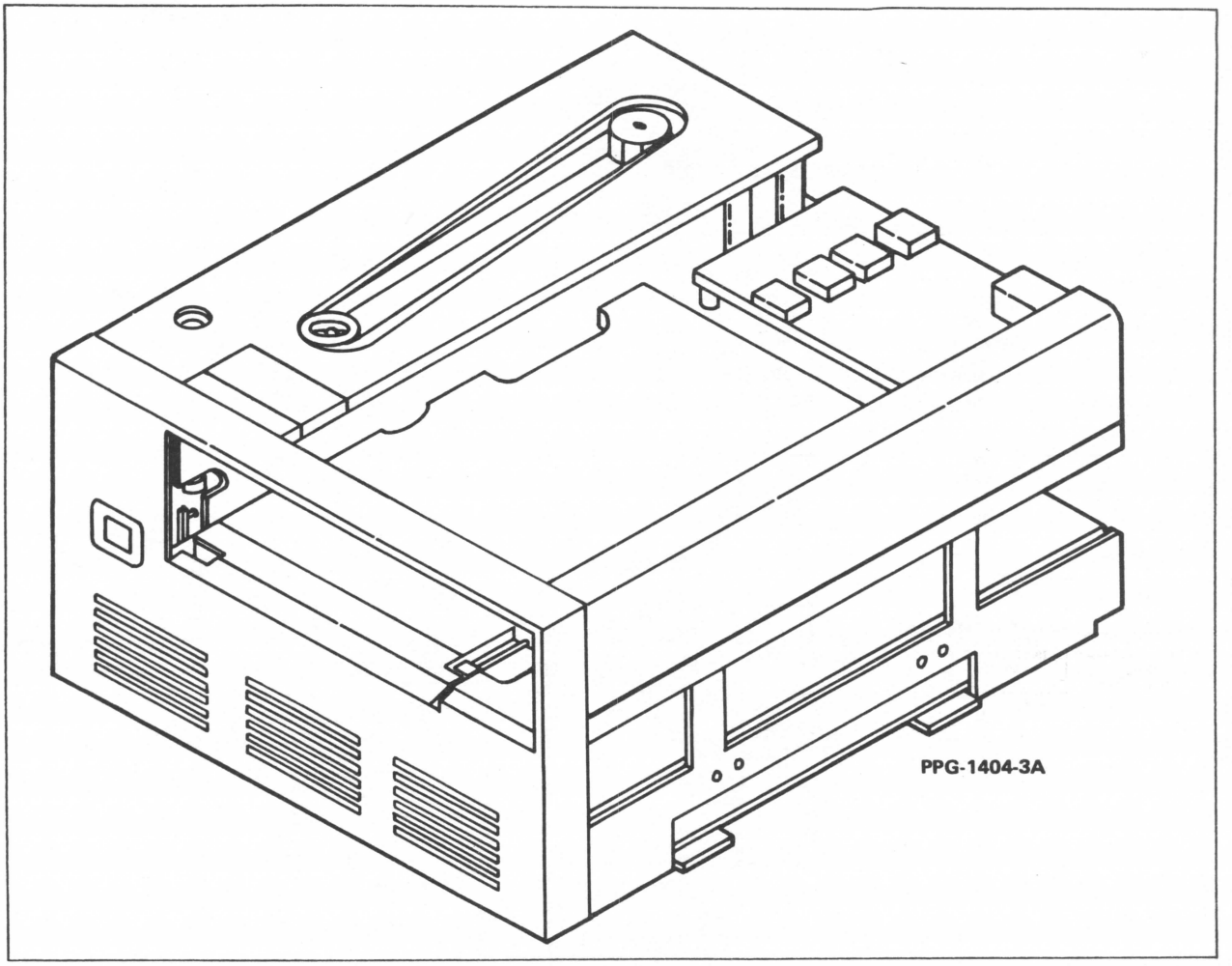

Figure 1-8. Tape Cartridge Drive

FORMATTER CIRCUIT CARD ASSEMBLY

The formatter circuit card assembly enables the tape storage subsystem's QIC-02/QIC-24 interface (refer to figure 1-9 for a functional block diagram of the formatter). This intelligent interface provides a convenient byte parallel data bus architecture with asynchronous handshaking to eliminate timing constraints. Data is recorded using the established QIC-24 format. Basic resources of the formatter include a Z80A microprocessor, 2 Kbytes of random-access memory (RAM), and 8 Kbytes of read-only memory (ROM). The formatter circuit card assembly is physically attached to the tape cartridge drive.

Other features of the formatter are as follows:

- Single 5-1/4-inch form factor
- Automatic defective media relocation
- 16-bit CRC error-detection coding
- 1.5 Kbyte on-board data buffer

NOTE

Refer to the Principles of Operation section in this manual for a description of the various formatter QIC-02/QIC-24 interface functions.

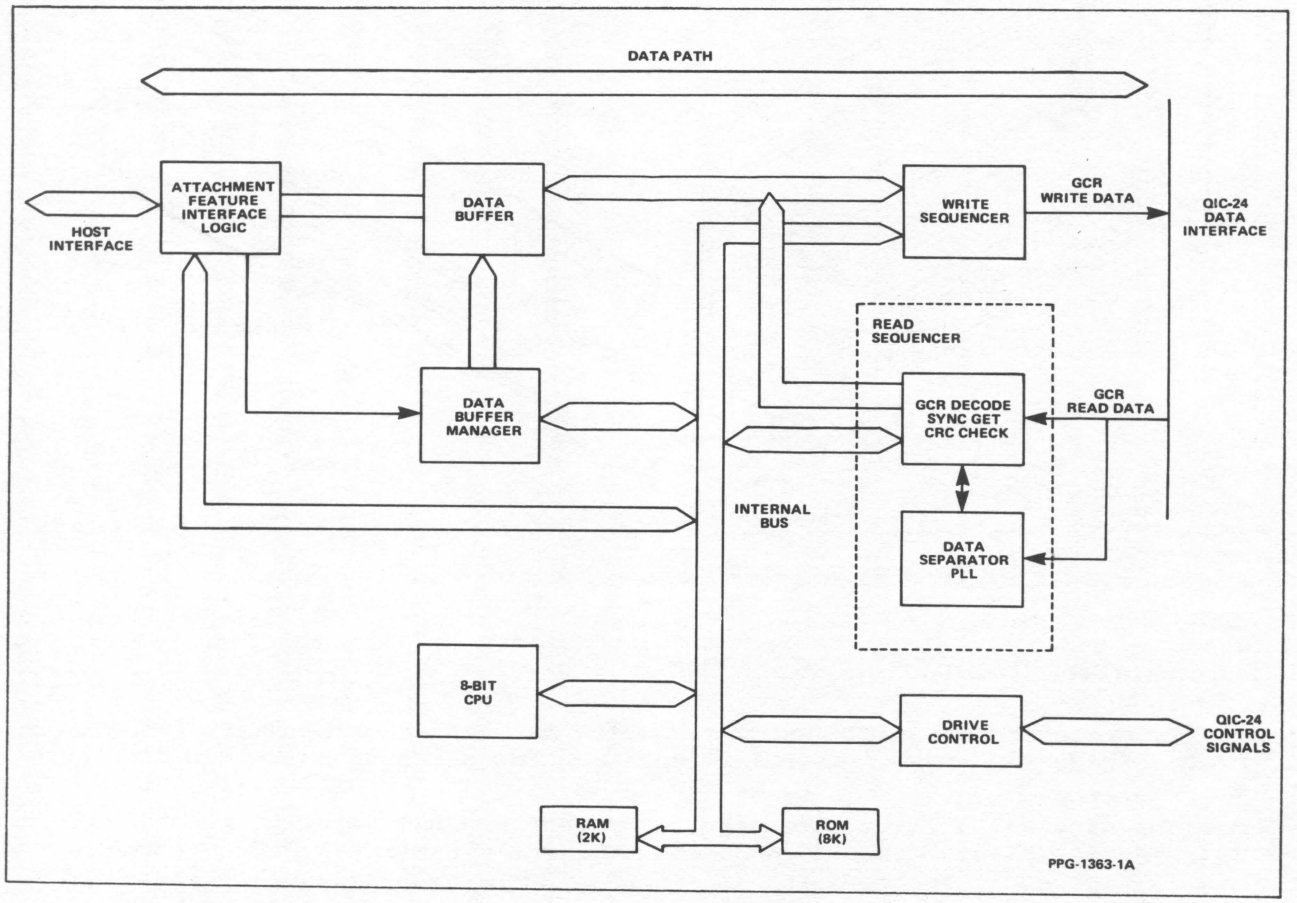

Figure 1-9. Formatter Block Diagram (QIC-02/QIC-24 Interface)

SUBSYSTEM CHARACTERISTICS

Tables 1-1 and 1-2 are convenient summaries of tape storage subsystem physical and electrical characteristics. Refer to the Model 80810-10 Cartridge Tape Streamer Subsystem Reference Manual, publication number 60467470, for a detailed listing of tape storage subsystem specifications.

TABLE 1-1. TAPE STORAGE SUBSYSTEM PHYSICAL CHARACTERISTICS

Specification	Attachment Feature Card	Tape Cartridge Drive (Not Enclosed)	Tape Cartridge Drive Enclosure Chassis
Length	273.05 mm (10.75 in)	215.90 mm (8.50 in)	457.20 mm (18.00 in)
Width	183.13 mm (7.21 in)	146.1 mm (5.75 in)	323.85 mm (12.75 in)
Height	8.9 mm (0.350 in)	82.6 mm (3.25 in)	107.95 mm (4.25 in)
Weight	14 ounces	1.9 kg (4.25 lbs)	9.1 kg (20.0 lbs)

TABLE 1-2. TAPE STORAGE SUBSYSTEM ELECTRICAL CHARACTERISTICS

Specification	Requirements	
	Attachment Feature	Tape Drive
Voltage	+5Vdc	+5Vdc and +12Vdc
Regulation	$\pm$10%	$\pm$5%
Current (maximum)	4.2 amperes	3.2 amperes
Power dissipation	20 Watts	33 Watts

OPERATION 2

This section provides basic operating instructions for the tape storage subsystem. These instructions include an overview of the subsystem's controls and indicators. This section also includes programming commands and operations related to the tape storage subsystem.

NOTE

For the procedures required to load and operate the tape utilities, refer to the Standalone Utilities User's Guide, Version 4.0, publication 60466020. Refer to appendix C for instructions for using the EDX utility programs to perform save/restore operations.

OPERATING OVERVIEW

This subsection consists of the following two parts:

- Description of tape storage subsystem controls and indicators
- Normal tape storage subsystem operating procedures

CONTROLS AND INDICATORS

The tape cartridge drive has an On/Off rocker switch that applies power to the drive unit. This switch is located on the front panel of the Series/1 enclosure. The only other operator control associated with the tape cartridge drive is a two-way voltage select switch located on the outside rear panel of the enclosure. This switch enables 115-Vac or 220-Vac operations. Note that the switch displays the voltage selected.

The only operator indicators associated with the tape cartridge drive are an activity LED and a Power ON LED located on the front panel of the drive enclosure. Whenever the tape cartridge drive is selected and during performance of save/restore operations, the activity indicator (physically located to the left of the Power ON/OFF switch) is lit. Whenever power is applied to the tape cartridge drive, the Power ON indicator is lit.

The tape cartridge used with the tape cartridge drive may have a write-protect mechanism (see figure 2-1). If you must protect data on the cartridge from being written over, turn the write-protect indicator on the tape cartridge so that the indicator points to the SAFE indicator.

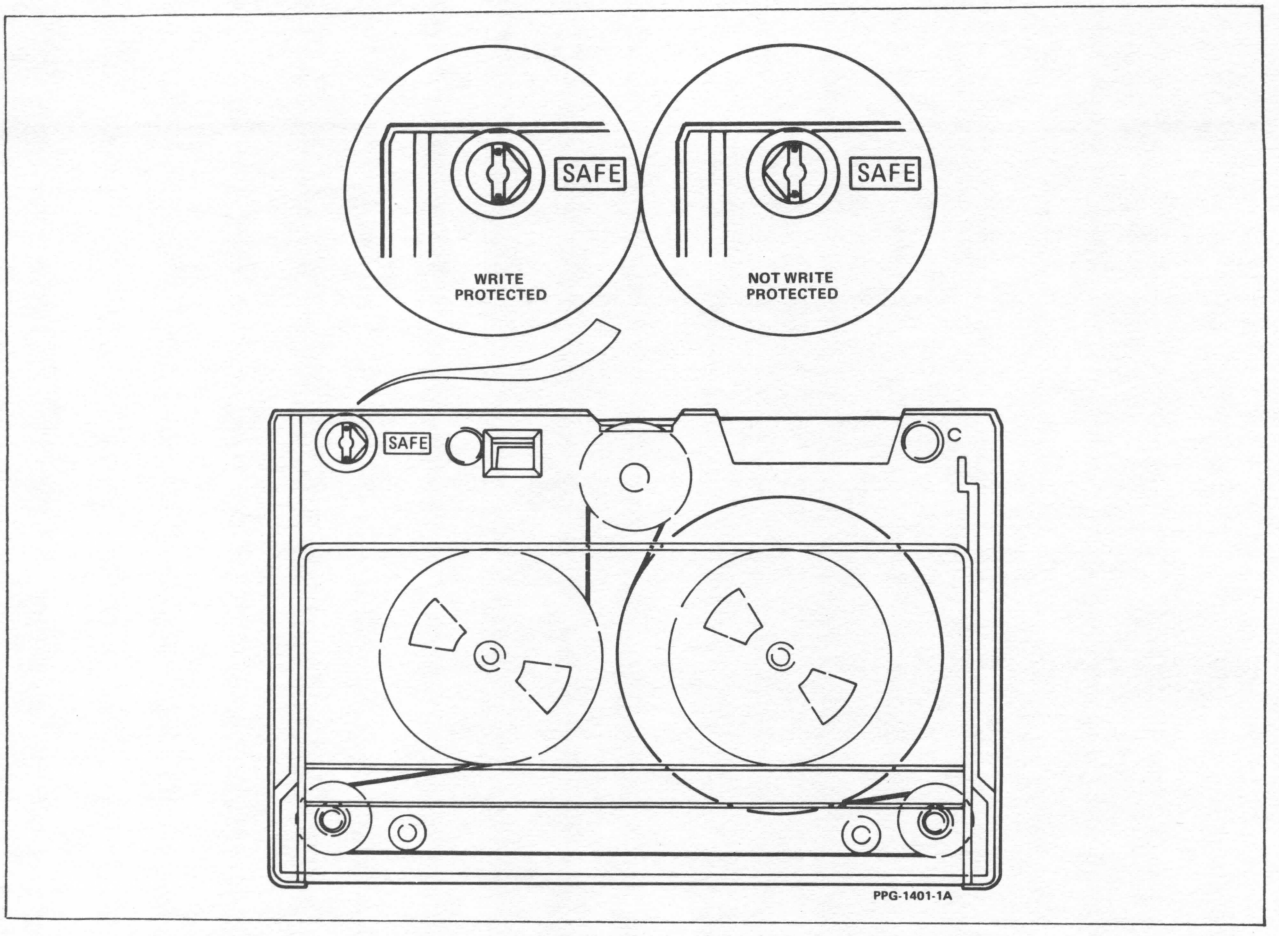

Figure 2-1. Write-Protect Feature

OPERATING PROCEDURES

The following paragraphs describe the power-on/power-off procedures and tape cartridge loading/unloading procedures. The following paragraphs also provide various operating considerations and precautions. Note that the Standalone Utilities User's Guide, Version 4.0, publication 60466020, contains complete details for running the various tape utilities for saving data, restoring data, etc. For procedures for using the EDX Program Utility, refer to appendix C of this manual. Refer to the Maintenance section (section 6) of this manual for instructions on loading and running tape storage subsystem diagnostics.

Power On Procedure

Perform the following steps to power on the tape storage subsystem:

1. Verify the connection of the subsystem power and I/O cables.

2. Place the tape cartridge drive power ON/OFF rocker switch to the ON (up) position. This switch is located on the front panel of the Series/1 enclosure.

3. Power up the Series/1 mainframe.

4. Verify that the Power On indicator located on the Power ON/OFF switch asssembly is lit.

5. Install the tape cartridge in accordance with the Cartridge Loading/ Unloading procedures contained in this section.

NOTE

If the tape cartridge drive does not power up when the power on procedure is performed, refer to the Maintenance section of this manual for further instructions.

Power Off Procedure

Perform the following steps to power down the tape storage subsystem:

1. Remove the tape cartridge from the drive (if loaded) in accordance with the Cartridge Loading/Unloading procedures contained in this section.

2. Place the tape cartridge drive enclosure Power ON/OFF rocker switch to the OFF (down) position.

Tape Cartridge Loading/Unloading

The tape cartridge drive loads in only one orientation: with the tape side facing the activity LED indicator side of the drive. When loading, push the cartridge into the front loading slot until the cartridge stops (see figure 2-2).

You can unload the tape cartridge (even during operation) by simply removing the cartridge from the loaded position. When unloading, push in on the tape cartridge enough to allow the cartridge to be released and ejected (see figure 2-3).

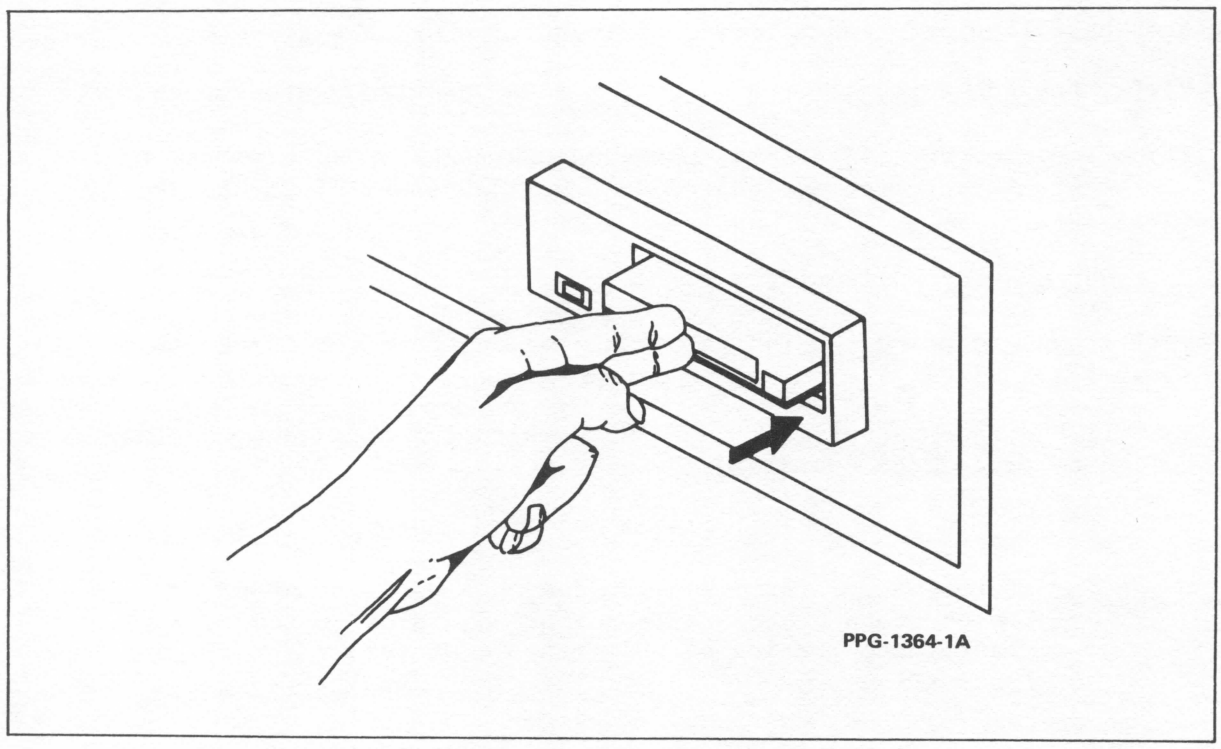

Figure 2-2. Tape Cartridge Loading

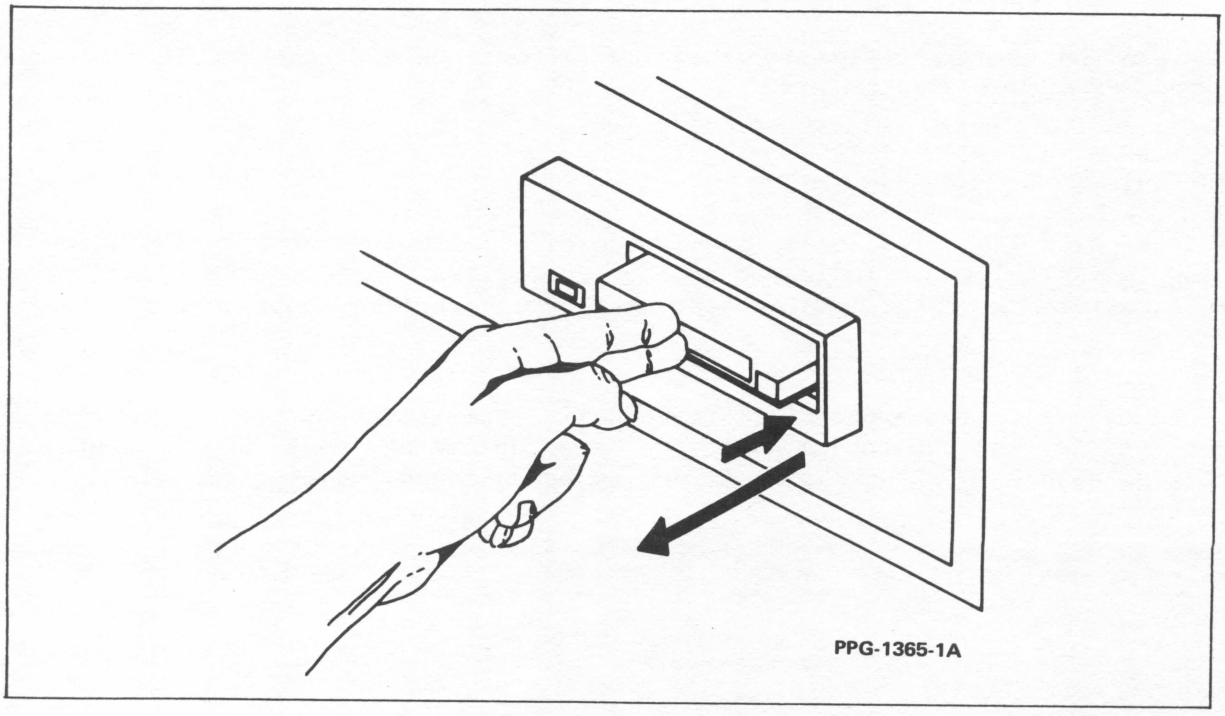

Figure 2-3. Tape Cartridge Unloading

OPERATING CONSIDERATIONS AND PRECAUTIONS

The following information describes various operating considerations and precautions. Failure to observe these cautions could result in equipment damage.

- Do not expose tape cartridges to dirt or other contaminates, moisture, or extreme temperatures.
- Never open the tape access cover to expose the tape when the cartridge is not in use.
- Avoid touching the tape. Touching the tape surface contaminates the magnetic coating.
- Avoid abrupt motions when handling tape cartridges. Abrupt motions can distort tape position.
- Never drop a tape cartridge. Hard impacts may damage the plastic cover.
- Never use a damaged tape cartridge or one that is is suspected of being faulty. ANY ATTEMPT TO USE A DAMAGED CARTRIDGE MAY DAMAGE THE TAPE CARTRIDGE DRIVE. Immediately discard defective tape cartridges to prevent them from being used inadvertently.
- When tape cartridges are not in use, store them in an environment that meets the storage criteria prescribed by the tape cartridge manufacturer. Pay particular attention to the manufacturer's guidelines concerning temperature and humidity.
- Never store or place tape cartridges in areas subjected to the magnetic fields generated by electric motors, transformers, or other similar devices.
- Condition tape cartridges by exposure to the Series/1 operating environment for a time equal to or greater than the time away from the operating environment (up to a maximum of 8 hours).
- Before new tape cartridges are used on a real-time basis, it is strongly recommended that you execute a Re-tension (TN) command to alleviate potential tension problems.
- After the insertion of a new tape cartridge, you should clean the drive's recording head and tape cleaners immediately following the first 2 hours of use. The recommended cleaning procedure is to use a lintless cotton swab with isopropyl alcohol or IBM tape cleaner.
- During normal operations, you should clean the drive's recording head and tape cleaners after every 8 hours of actual use.

NOTE

Head-cleaning procedures are contained in the Maintenance section of this manual.

- Certify all new tape cartridges before using them. Use the tape utility program provided with the unit.

PROGRAMMING

The remainder of this section describes how the Series/1 processor carries on I/O communications with the tape storage subsystem. This is discussed in two parts:

- Attachment feature card word formatting, commands, and operations
- Tape cartridge drive/formatter data formatting, commands, and operations

ATTACHMENT FEATURE CARD WORD FORMATTING

The attachment feature card services commands received from the Series/1 processor, initiates the appropriate read/write (R/W) instructions, and controls data transfers to and from the tape cartridge drive.

The card receives a Series/1 processor command as a pair of 16-bit words, referred to as the immediate device control block (IDCB). The first 16-bit word (see figure 2-4) contains command and address information. If the command is to be executed under DPC, the second 16-bit word contains an immediate data word (see figure 2-4) required for the command operation. If an immediate data word is not required, this word is zero-filled. If the command is to be executed in CS mode, the second 16-bit word contains the address of an eight-word data block that provides all the parameters that the attachment feature requires to execute the command. This eight-word data block is commonly referred to as the device control block (DCB).

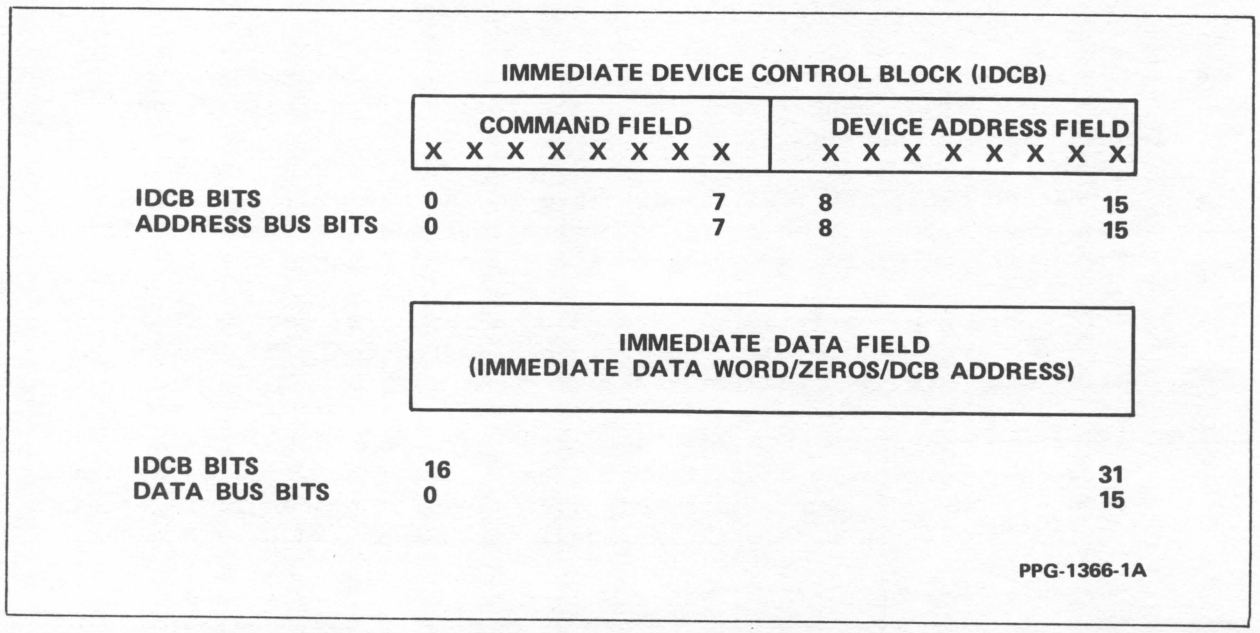

Figure 2-4. Immediate Device Control Block Word Formats

In both the CS mode and DPC, the card receives the IDCB containing the command, checks the IDCB for errors and validity, and responds with the appropriate condition code. For commands executed under DPC, the card also performs the function requested.

For commands that do not require interrupts, the condition code provides current device status information. For commands that require an interrupt request, the first condition code provides information concerning the acceptance of the command by the card. Upon interrupt servicing by the processor, the card provides a second condition code and an interrupt word. The second condition code contains status information concerning the end-of-command execution. The interrupt word (see figure 2-5) provides the address of the device requesting the interrupt and a zero-filled interrupt information byte (IIB). If the condition code indicates an improper ending of the command execution, the IIB bits have special meanings, and the byte is referred to as an interrupt status byte (ISB).

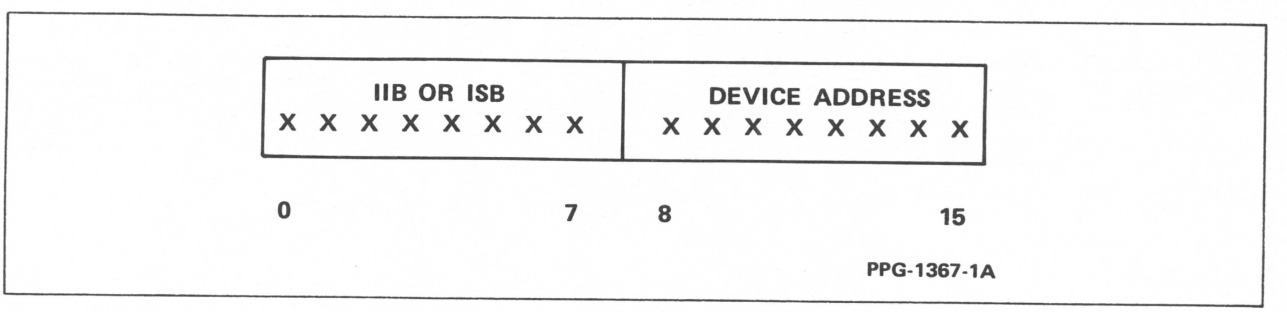

Figure 2-5. Interrupt Word Format

The attachment feature card provides up to 5 bytes of status information for error recovery. The card transfers these bytes to the Series/1 processor via the START CYCLE-STEAL STATUS command.

ATTACHMENT FEATURE CARD RESPONSES TO SERIES/1 PROCESSOR COMMANDS

The following information describes tape storage subsystem attachment feature card responses to Series/1 processor commands. The card provides basic command recognition, interpretation, data buffering, and response. Card operations are performed in conjunction with the subsystem's formatter circuit card assembly and the tape cartridge drive. The formatter circuit card provides the subsystem capabilities of data formatting, media storage, and ECC error checking and correction.

DPC Commands

The attachment feature card receives commands, data, and channel error information from the Series/1 processor and responds with condition codes, interrupt information, and status words. Upon receiving a START command from the processor, the card sends an equivalent command and control signals to the tape cartridge drive/formatter to perform the required I/O operation.

Processor-issued commands are executed and/or acknowledged by the attachment feature card under direct program control (DPC). Commands are received on address bus bits 0 through 7 corresponding to bits 0 through 7 of the IDCB. Address bus bits 8 through 15 contain the device address as given in IDCB bits 8 through 15. The data bus bits 0 through 15 correspond to the second IDCB word (bits 16 through 31), which is called the immediate data field. Table 2-1 shows the commands, their codes, use of the immediate data field as reflected on the data bus, and description of the command function executed under DPC.

SERIES/1 PROCESSOR/TAPE STORAGE SUBSYSTEM ATTACHMENT FEATURE I/O OPERATIONS

START and START CYCLE-STEAL STATUS commands initiate I/O operations. The immediate data field of a Start or Start Cycle-Steal Status IDCB contains an address for a DCB. The DCB consists of eight contiguous 16-bit words stored in processor memory, which define the parameters of an I/O operation, as follows:

DCB (device control block)

Word 0	Control word
Word 1	Not used
Word 2	Not used
Word 3	Not used
Word 4	Reserved for diagnostics
Word 5	Chain address (next DCB address)
Word 6	Byte count
Word 7	Starting address of data storage address

DCB bits --- 0 7 8 15

Data bus bits --- 0 7 8 15

DCB words are transferred in cycle-steal mode to the attachment feature via the data bus between the Series/1 channel and the attachment feature. You may chain DCBs together using bit 0 of word 0 and bits 0 through 15 of word 5. In this way, several I/O operations are performed serially without interrupting the processor until the last DCB in the chain is executed.

TABLE 2-1. DPC COMMAND SUMMARY

Command Name	Code (address bus bits)		Data Bus Bits 0 Through 15	Description
	0123	4567		
PREPARE	0110	0000	Bits 1-10 = zeros Bits 11-14 = interrupt level Bit 15 = enable interrupt (1) or disable interrupt (0)	Enter interrupt parameters into the prepare register. Must be received before an interrupt-causing command is executed.
DEVICE RESET	0110	1111	Data bus = zeros	Reset all pending interrupts and previously established control and status conditions. Does not reset device ID, device address, data address, and prepare registers.
READ DEVICE ID	0010	0000	Data bus = zeros	Load the device ID word onto data bus bits 0 through 15 for processor storage.
START	0111	0000	Data bus = DCB address	Initiate data transfer in cycle-steal mode to execute one or more of the I/O operations described in DCB word 0 (see table 3-7).
START CYCLE STEAL STATUS	0111	1111	Data bus = DCB address	Initiate data transfer in cycle-steal mode to execute a cycle-steal status I/O operation.
START DIAGNOSTIC 1	0111	1101	Data bus = DCB address	Initiate microprocessor self-test with results indicated in status words.
START DIAGNOSTIC 2	0111	1110	Data bus = DCB address	Initiate an internal bus test.
START DIAGNOSTIC 3	0111	1100	Data bus = DCB address	Initiate a RAM read, a RAM write and execute, a Read tape status, an ECC test, or a wrap test.

DCB Word 0 - Control Word

The 16 bits of the control word contain the parameters for the cycle-stealing sequence and the binary code for the I/O operation selected, as follows

DCB Control Word (DCB Word 0)

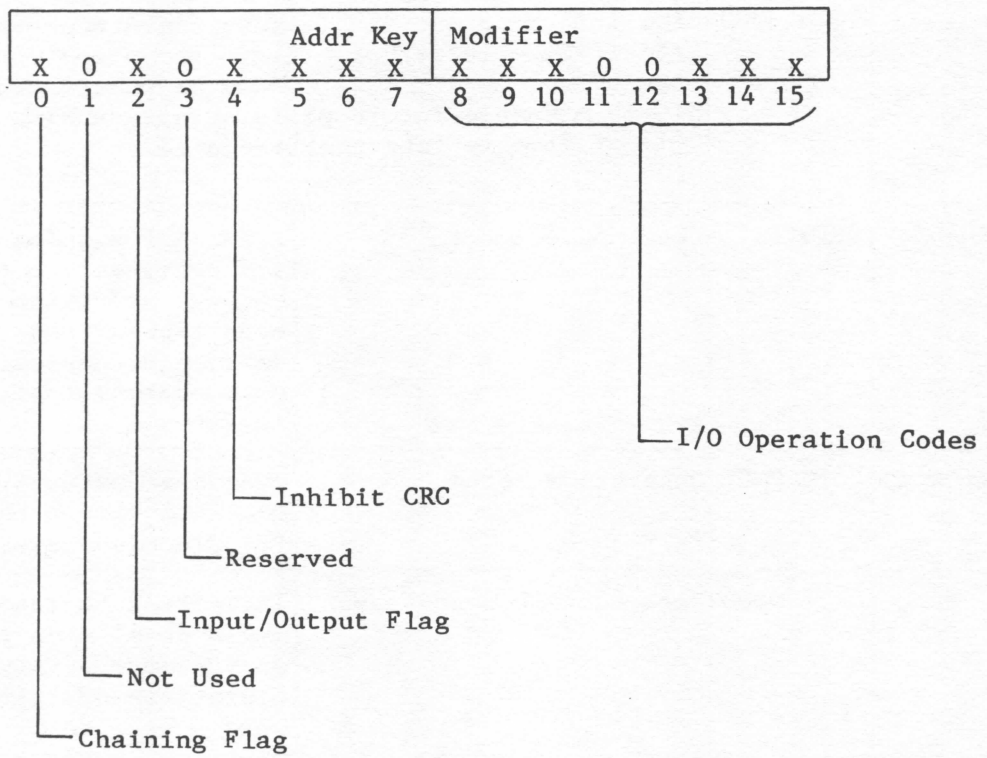

Bit 0 is a chaining flag. When set to a logical 1, the bit indicates that another DCB is to be executed following this DCB without an intervening processor interrupt, if this DCB is executed successfully. The address for the next DCB is contained in word 5 of this DCB. As each DCB in the sequence is executed, the attachment feature uses the chain address stored in the current DCB to select the next DCB. The operation continues until a DCB is executed that has the chaining bit in the control word set to a logical 0. If an error occurs, the chaining operation is suspended, and the attachment feature sends an interrupt request to the processor. Command chaining reduces the processing time required to execute I/O operations.

DCB control word bit significance is as follows:

- Bit 0 is checked only if the command in the IDCB was a START command.
- Bits 1 and 3 are not used and are set to a logical 0.
- Bit 2 is an input/output indicator. If bit 2 is a logical 0, the direction of data flow for the operation is from main processor storage. If bit 2 is a logical 1, data flow is to main processor storage.
- Bit 4, when set to a logical 1, is used to inhibit CRC checking during save and restore operations.
- Bits 5, 6, and 7 contain a storage access authorization key used during a data transfer to main processor storage. If the key is not a valid key, a protect check occurs (bit 6 of the ISB is set to a logical 1).
- Bits 8 through 15 contain the various I/O operation codes as outlined in table 2-2.

TABLE 2-2. I/O OPERATIONS

Modifier Bits 8 through 15 (Hexadecimal)	Operation	Comments
21	Restore	
24	Re-tension	
A0	Read File Mark	
22	Erase Entire Tape	
60	Write File Mark	
80	Read Tape	Reads the number of bytes specified in DCB word 6
40	Write Tape	Writes the number of bytes specified in DCB word 6

NOTE

The attachment feature receives and properly responds to unused codes; however, these codes do not cause any I/O operation to occur.

Start-DCB Operation

The following paragraphs describe the tape operations that a start DCB can define.

Restore

A start DCB with the modifier in DCB word 0 equal to 21 hexadecimal specifies the restore (or rewind) operation. When you issue the RESTORE command, tape in the cartridge is positioned to the beginning of tape (BOT) position. The RESTORE command only uses DCB word 0.

Re-tension

A start DCB with the modifier in DCB word 0 equal to 24 hexadecimal specifies the re-tension operation. When you issue the RE-TENSION command, the tape in the cartridge is moved to the BOT position, then to the end-of-tape (EOT) position, and finally back to the BOT position. The RE-TENSION command only uses DCB word 0.

NOTE

Before saving data onto a new tape cartridge, it is strongly recommended that you execute the RE-TENSION command to alleviate potential tape tension problems.

Read File Mark

A start DCB with the modifier in DCB word 0 equal to the A0 hexadecimal specifies the read file mark operation. When you issue the READ FILE MARK (RFM) command, tape in the cartridge is advanced to the next file mark. The RFM command only uses DCB word 0.

If bit 4 of DCB word 0 is set to a logical 0, the CRC generator/checker is tested when a file mark is read. The results in the checker should be 0, indicating no errors were detected. If an error(s) is detected, the attachment feature responds with an 02 condition and bit 3 of status word 1 is set.

Erase Tape

A start DCB with the modifier in DSB word 0 equal to 22 hexadecimal specifies the erase tape operation. When you issue the ERASE command, tape in the cartridge is completely erased. During execution of this command, cartridge tape is moved to the BOT position where the erase head is activated. Once the erase head is activated, the tape is moved to the EOT position. Once the EOT position is reached, the erase head is deactivated, and the tape is automatically repositioned to the BOT position. The ERASE command only uses DCB word 0.

Write File Mark

A start DCB with the modifier of DCB word 0 equal to 60 hexadecimal specifies the write file mark operation. The command WRITE FILE MARK (WFM) enables the write file mark function. When you issue the WFM command, a file mark is written on the tape. The WFM command only uses DCB word 0.

If bit 4 of DCB word 0 is set to a logical 0, a 512-byte block is written on the tape preceding the file mark. This block consists of 508 bytes of zeros followed by a 4-byte CRC.

Read Tape

A start DCB with the modifier of DCB word 0 equal to 80 hexadecimal specifies the read tape operation. The command READ enables the read tape function. When the READ command is issued, data is transferred from the tape to Series/1 memory until the number of bytes specified in the DCB word 6 are read. If bit 4 of DCB word 0 is set to a logical 1, tape motion stops. If this bit is set to a logical 0, tape continues to move as another DCB is expected.

During a read operation, the attachment feature asserts the On-line signal and then issues the READ command. Once this occurs, the tape cartridge drive/formatter can transfer data. The Ready line is activated when the tape cartridge drive/formatter is ready for a data-block transfer. The formatter terminates the READ command if a file mark is detected. When this occurs, the attachment feature card is notified by means of an exception status and a READ STATUS command sequence. When the Ready signal is asserted, the attachment feature card may terminate the READ command by issuing a READ FILE MARK (RFM) command. If a READ command is issued, the command is accepted and the drive continues the read operation.

A READ command following cartridge insertion or the issuance of a RESET command causes the read operation to begin at the BOT position. At all other times, the read operation begins at the current tape position.

NOTE

> If the attachment feature starts transfer between blocks before the Ready signal is asserted, Ready may not be asserted.

DCB words 1 through 4 are not used for a read operation. DCB word 5 contains the chaining address. DCB word 6 contains the byte count. The byte count is a multiple of 512_{10} and can be as large as FFE0 hexadecimal. DCB word 7 contains the data address.

Write Tape

The write tape operation is specified by a start DCB having the modifier of DCB word 0 equal to 40 hexadecimal. The command WRITE is used to enable the write tape function. During a write operation, the attachment feature card asserts the On-line signal and then issues the WRITE command. Once this occurs, the tape cartridge drive/formatter can request and transfer data. The formatter activates the Ready signal when it is ready for a data-block transfer. When Ready is active, the card terminates the transfer of write data by issuing a WFM command. The attachment feature can alternatively terminate the transfer of write data by deactivating the ONLINE command. Deactivating the ONLINE command causes the writing of a file mark (if not preceded by a command), and the tape rewinds to the BOT.

A WRITE command following cartridge insertion or the issuance of a RESET command causes recording to begin at the BOT position. At all other times, recording begins at the current tape position.

NOTE

If the attachment feature card starts transfer between blocks before the Ready signal is asserted, Ready may not be asserted.

When the tape cartridge drive detects the early warning (EW) hole of the last track, the tape cartridge drive stops accepting data blocks from the attachment feature card. When this occurs, the tape cartridge drive/formatter terminates the WRITE command and reports an end-of-media condition by means of the EXCEPTION and READ STATUS commands.

NOTE

If a WRITE command is issued, the tape cartridge drive/formatter allows the transfer of an additional 1024 bytes of data.

Basic Condition Codes

The attachment feature card sends a condition code to the processor at the completion of DPC execution of a command and at the end of a cycle-steal execution of an I/O operation requested by a command. For commands that do not cause interrupt requests, the condition code presented at the completion of the DPC mode represents the only status information available from the attachment feature. Table 2-3 and the following paragraphs summarize the condition codes reported following DPC execution of commands.

TABLE 2-3. CONDITION CODES PRESENTED FOLLOWING DPC COMMAND EXECUTION

Condition Code In Bus Bits			Significance
2	1	0	
0	0	0	Device not attached
0	0	1	Busy
0	1	0	Busy after reset
0	1	1	Command reject
1	0	0	Not used
1	0	1	Interface data check
1	1	0	Not used
1	1	1	Satisfactory

NOTE

Following execution of commands in cycle-steal mode and changes of status within the attachment feature that cause interrupts, a condition code is reported to the processor. Table 2-4 describes these codes, which are presented at interrupt servicing time.

Condition Code 0 - Device Not Attached

The I/O channel reports this code when the attachment feature is not attached to the Series/1.

Condition Code 1 - Busy

The attachment feature card reports this code when the card is unable to execute a command because the device is in the busy state. The card enters the busy state upon acceptance of a command that requires an interrupt for termination. The card exits from the busy state when the Series/1 processor accepts the interrupt.

Condition Code 2 - Busy After Reset

The attachment feature card reports this code when the card is unable to execute a command because of a reset and when the card has not had sufficient time to return to the inactive state. There is no interrupt to indicate termination of this condition.

Condition Code 3 - Command Reject

The attachment feature card or the Series/1 I/O channel reports this code when one of the following occurs:

- A command is issued that is outside the card command set
- The card is in an improper state to execute the command
- The IDCB contains an incorrect parameter, such as an odd-byte DCB address or an incorrect function/modifier combination

When the card reports a command reject, it does not fetch the DCB.

Condition Code 4

This condition code is not used with the tape storage subsystem.

Condition Code 5 - Interface Data Check

The attachment feature card or the Series/1 I/O channel reports this code when a parity error is detected on the I/O data bus during a data transfer.

Condition Code 6

This condition code is not used with the tape storage subsystem.

Condition Code 7 - Satisfactory

The attachment feature card reports this code when it has accepted a command.

Interrupt Condition Codes

Following execution of commands in cycle-steal mode and changes of status within the attachment feature card that cause interrupts, a condition code is reported to the processor. Table 2-4 and the following paragraphs describe these codes, which are presented at interrupt servicing time.

TABLE 2-4. CONDITION CODES REPORTED AT INTERRUPT PRESENTATION TIME

Condition Code In Bus Bits			Significance
2	1	0	
0	0	0	Not used
0	0	1	Not used
0	1	0	Exception (error condition)
0	1	1	Device End (satisfactory)
1	0	0	Attention (ready signal goes low)
1	0	1	Not used
1	1	0	Not used
1	1	1	Not used

Condition Codes 0, 1, 5, 6, and 7

These condition codes are not used with the tape storage subsystem.

Condition Code 2 - Exception

This code is reported when an error or exception condition is associated with the priority interrupt. This condition is described in the interrupt status byte (ISB) and further described in the status information contained in the cycle-steal status block.

Condition Code 3 - Device End

This code is reported when no error exception or attention conditions occur during the I/O operation and a normal termination of the operation has occurred.

Condition Code 4 - Attention

This code is reported when the attachment feature card becomes ready after being in a not ready state. Along with the interrupt condition code, the card also transfers an interrupt ID word, which provides additional information on the interrupting conditions.

Interrupt Identification

Status information presented at interrupt presentation time is available in an interrupt ID word. Bits 8 through 15 of the interrupt ID word contain the address of the interrupting device. Bits 0 through 7, which are the interrupt information byte (IIB), indicate end-of-operation interrupt or attention interrupt. If the execution of START commands fails to end satisfactorily, the IIB contains special information concerning the cause of the failure and is called an interrupt status byte (ISB). The ISB always accompanies an exception condition code (010). Table 2-5 summarizes ISB bit significance.

Status Words

The START CYCLE-STEAL STATUS command transfers status words to the processor. The status words contain additional status information when exception condition code 010 is reported. The following paragraphs describe the various start cycle-steal status words used by the tape storage subsystem.

Cycle-Steal Status Word 0 - Residual Address

When a cycle-steal transfer is halted, the processor storage address where the last cycle-steal of data occurred remains in the address counter of the attachment feature. This is the residual address and is accessible as cycle-steal status word 0. If the last attempted transfer was a word, the residual address is the address of the odd byte of the word. Power-on reset causes the residual address to be reset to a logical 0.

Cycle-Steal Status Word 1 - Tape Unit Status

This word provides the status at the time of the last START Command terminating interrupt. Table 2-6 summarizes bit significance for this word.

TABLE 2-5. INTERRUPT STATUS BYTE

Bit	Title	Significance
0	Device Status Available	When this bit is set to a logical 1, additional information about the operation is available in cycle-steal status word 1. Issue a START CYCLE-STEAL STATUS command to obtain the information.
1	Delayed Command Reject	If the tape unit is off-line or the IDCB contains an incorrect parameter, the attachment feature card is incapable of recording the condition on the condition code in bus because the I/O instruction is not executable. The operation terminates, and this bit is set to a logical 1. At interrupt servicing time, condition code 010 is reported. The residual address will not contain any relevant status information.
2	Not Used Always 0	
3	DCB Specification Check	When set to a logical 1, this bit indicates the I/O operation failed due to an invalid parameter in the DCB. Condition code 010 is reported at interrupt servicing time. Cycle-steal status word 0 contains a residual address pointing to the processor memory location of the invalid parameter. Issue a START CYCLE-STEAL STATUS command to obtain the information.
4	Storage Data Check	When this bit is set to a logical 1, the operation ended because data accessed from processor storage during a cycle-steal output operation was out of parity. When this occurs, the parity of the data in the storage location is not corrected, a machine check does not occur, and condition code 010 is reported.
5	Invalid Storage Address	If a logical 1 is set in this bit, this indicates that the storage address specified in the DCB was beyond the capacity of processor storage. If this condition exists, the operation is halted immediately and condition code 010 is reported. This bit can be set on either an input or an output cycle steal operation.
6	Protect Check	A logical 1 in this bit indicates an incorrect cycle-steal address key was used during an attempt to write data to processor storage. When this occurs, the operation is halted immediately, and condition code 010 is reported at interrupt service time.
7	Interface Data Check	When this bit is set to a logical 1, a parity error occurred on the data bus interface to the attachment feature. When this occurs, the operation is immediately terminated, and condition code 010 is reported.

TABLE 2-6. CYCLE-STEAL STATUS WORD 1 SUMMARY

Bit	Title	Significance
0	Tape Not Operational	The tape unit is not ready.
1	ROM Test Failure	
2	RAM Test Failure	
3	CRC Error	The calculated CRC did not agree with CRC written on the tape.
4	Parity Error	
5	Not Ready Error	The tape did not go not ready within specified time limit.
6	Ready Error	The tape did not go ready within specified time limit.
7	Diagnostic 2 Error	The device could not transfer data correctly on internal bus.
8-11	Not Used	
12	Status Bit 00	This indicates a storage data check.
13	Status Bit 01	This indicates an invalid storage address.
14	Status Bit 02	This indicates protect check.
15	Status Bit 03	This indicates interface data check.

Cycle-Steal Status Word 2

Status bytes 0 and 1 of cycle-steal status word 2 contain information related to any abnormal condition(s) detected by the tape cartridge drive/formatter. Bit significance for these 2 status bytes is as follows:

Bit — Status Byte 1

7 POR - The formatter sets the power on/reset (POR) bit after the attachment feature asserts Reset or when you power up the tape cartridge drive/formatter. A READ STATUS command sequence resets the bit.

6 RES - This is reserved.

5 RES - This is reserved.

4 BOM - The formatter sets the beginning-of-media (BOM) bit whenever the cartridge is logically positioned at the beginning-of-tape (BOT), track 0. The bit is reset when the tape moves away from BOT, track 0. This is the only bit in byte 1 that does not set the Exception signal when the bit goes true. A READ STATUS command sequence does not reset bit 4.

Bit	Status Byte 1
3	MBD - The formatter sets the marginal block detected (MBD) bit when the tape cartridge drive/formatter determines that a data block is marginal. A READ STATUS command sequence resets the bit.
2	NDD - The formatter sets the no data detected (NDD) bit when an unrecoverable data error occurs due to a lack of recorded data. Absence of recorded data indicates that a data block was not detected during an attachment feature card-generated timeout. A READ STATUS command sequence resets the bit.
1	ILL - The formatter sets the illegal (ILL) bit if one of the following conditions is encountered. A RESET STATUS command sequence resets the bit. • The On-line signal is not asserted when a WRITE, WRITE FILE MARK, READ, or READ FILE MARK command is issued. • A command other than WRITE or WRITE FILE MARK is issued during the execution of a WRITE DATA command sequence. • A command other than READ or READ FILE MARK is issued during the execution of a READ DATA command sequence.
0	ST1 - The formatter sets the status byte 1 (ST1) bit if any other bit in status byte 1 is set.
7	FIL - The formatter sets the file mark detected (FIL) bit when a file mark is detected during a READ DATA or READ FILE MARK command sequence. A READ STATUS command sequence resets the bit.
6	BNL - The formatter sets the block-in-error not located (BNL) bit when an unrecoverable read error occurs and the tape cartridge drive/formatter cannot confirm that the last block transmitted was the block in error. A READ STATUS command sequence resets the bit.
5	UDA - The formatter sets the unrecoverable data (UDA) bit when the tape cartridge drive/formatter experiences a hard error during read or write operations. A READ STATUS command sequence resets the bit.
4	EOM - The formatter sets the end-of-media (EOM) bit when the logical early warning (EW) hole of the last track is detected during a write operation. This bit remains set as long as the drive is at the logical end-of-media position. A READ STATUS command sequence cannot reset the EOM bit.
3	WRP - The formatter sets the write-protected (WRP) bit if the tape cartridge write protect switch is set in the file protect Safe position. You must change the position of the write protect switch before this status bit can be reset.

Bit	Status Byte 0
2	USL - The formatter sets the drive unselected (USL) bit if the drive is not physically connected or is not receiving power. You must correct the condition before this status bit can reset.
1	CNI - The formatter sets the cartridge not in place (CNI) bit if a tape cartridge is not fully inserted into the drive. You must correct the condition before this status bit can reset.
0	STO - The formatter sets the status byte 0 (STO) bit if any other bit in status byte 0 is set.

Status Bytes 2 and 3

Bytes 2 and 3 of cycle-steal status word 2 define a tape error or illegal condition as summarized in table 2-7.

TABLE 2-7. EXCEPTION STATUS SUMMARY

Byte 0	Byte 1	Description
110X0000	00000000†	No cartridge - The selected drive did not contain a cartridge when the attachment feature issued RESTORE, RE-TENSION, ERASE, WRITE, WFM, READ, or RFM commands, or the cartridge was removed while the drive was selected. This is a fatal condition.
11110000	00000000	No drive - The selected drive was not present when RESTORE, RE-TENSION, ERASE, WRITE, WFM, READ, or RFM command was issued. This is a fatal condition.
10010000	X000X000	Write-protected - The selected drive contained a write-protected (safe) cartridge when the attachment feature card issued a ERASE, WRITE, or WRM command. This is a fatal condition.
10001000	00000000	End of media - During a write operation, the tape passed the logical early warning (EW) hole for the last track on the media. This is a recoverable condition.

† X denotes either 0 or 1 condition.

TABLE 2-7. EXCEPTION STATUS SUMMARY (Contd)

Byte 0	Byte 1	Description
100X0100	10001000	Read or write abort - The attachment feature card detected the maximum limit of same block rewrites during a WRITE or WFM command or an unrecoverable reposition error during a WRITE, WFM, READ, or RFM command. When a read or write abort occurs, the drive repositions the tape to the BOT. This is a fatal condition.
100X0100	00000000	Read error, bad block transfer - The maximum limit of same block retries has failed to recover the block without a CRC error. Also, the last block transferred contained data from the erroneous data block for off-line reconstruction. This is a recoverable condition.
100X0110	00000000	Read error, filler block transfer - The maximum limit of same block retries has failed to recover the block without a CRC error. Also, the last block transferred contained filler data to keep the total block count correct. This is a recoverable condition.
100X0110	10100000	Read error, no data - The read error, no data status condition indicates that no recorded data was found on the tape. This is a recoverable condition.
100X1110	10100000	Read error, no data and EOM - The maximum limit of same block retries has failed to recover the next or subsequent blocks, and the logical end-of-tape (EOT) holes on the last track were encountered. This is a recoverable condition.
100X0001	00000000	Read a filemark - A filemark block was read during execution of a READ or WRITE command. This is a recoverable condition.

† X denotes either 0 or 1 condition.

TABLE 2-7. EXCEPTION STATUS SUMMARY (Contd)

Byte 0	Byte 1	Description
XXXX0000	1100X000	Illegal command - This status indicates that one of the following events has occurred: • The attachment feature card tried to select more than one drive. • The card tried to change drive selection when the tape was moved away from the BOT position by a read or write operation. • The drive attempted to simultaneously execute a RESTORE, RE-TENSION, and/or ERASE command. • The drive attempted to execute a WRITE, WFM, READ, or RFM command with the On-line signal not asserted. • The attachment feature card tried to issue a command other than WRITE or WFM during a write sequence. This is a fatal condition. • The card tried to issue a command other than READ or RFM during a read sequence. This is a fatal condition. • The card tried to assert an unknown or undefined command.
XXXX0000	1000X001	Power-on reset - A power-on reset or a card-generated reset has occurred. This is a fatal condition.
100X0001	00010000	Marginal block detected - The tape cartridge drive/formatter detected a marginal data block. This is a recoverable condition.

† X denotes either 0 or 1 condition.

Cycle-Steal Status Word 3

Bytes 0 and 1 of this status word contain the data error counter, which accumulates the number of blocks rewritten for write operations and the number of soft read errors detected during read operations. A READ STATUS command sequence clears these bytes.

Cycle-Steal Status Word 4

Bytes 0 and 1 of this status word contain the underrun counter, which accumulates the number of times that streaming was interrupted because the attachment feature failed to maintain the minimum throughput rate. A READ STATUS command sequence clears these bytes.

Status After Resets

The paragraphs to follow provide basic information related to power-on resets and to halt I/O and system/device resets.

Power-On Reset

Power-on resets result in internal register, data flow, and storage tests being performed. Following successful tests, all internal buffer locations in the tape unit are cleared. Following a power-on reset, the residual address is set to a logical 0.

Halt I/O, System, and Device Resets

A HALT I/O command or system or device reset halts tape unit operation. When one of these conditions is present, all pending interrupts are reset.

Start Diagnostics

The following paragraphs provide basic information related to the START DIAGNOSTIC 1, START DIAGNOSTIC 2, and START DIAGNOSTIC 3 commands.

START DIAGNOSTIC 1 Command

The START DIAGNOSTIC 1 command tests the read DCB logic and attachment feature card memory. Test organization is as follows:

- DCB Test

  The following DCB words are required:

  DCB 0,7 = 0000 hexadecimal
  DCB 1,2,3 = 5555 hexadecimal
  DCB 4,5,6 = AAAA hexadecimal

  Each DCB is checked for the above value. If an error is detected, bit 3 of the ISB (DCB specification check) is set.

- RAM/ROM Test

  This part of the diagnostic tests RAM/ROM memory on the attachment feature. If an error is detected, bit 0 of the ISB (device-dependent status available) is set, and the following status word bits are set as shown:

  Status word 1, Bit 1 - Memory error
  Status word 7, Bit 8 - ROM error
  Status word 7, Bit 9 - RAM error

START DIAGNOSTIC 2 Command

The START DIAGNOSTIC 2 command tests the internal data busses on the attachment feature. This command does not use the DCBs. If an error is detected, bit 7 of cycle-steal status word 1 is set to 1.

START DIAGNOSTIC 3 Command

The START DIAGNOSTIC 3 command uses bits 13, 14, and 15 of DCB word 0 to specify the diagnostic subroutine to be executed. Test organization is as follows:

Bits 13	14	15	
0	0	1	Read/Write RAM
0	1	0	Write RAM and execute
0	1	1	Diagnostic wrap test
1	0	0	CRC test
1	0	1	Read tape status

- Read/Write RAM - The input bit of DBC word 0 specifies if a read or write operation is to be executed.

  Input Bit = 1 - Read RAM is executed. This routine transfers a block of data to the Series/1 memory.

DCB Word	Description
2	Attachment feature RAM address
6	Byte count (must be even)
7	Series/1 address (must be even)

  Input Bit = 0 - Write RAM is executed. This subroutine transfers a block of data from the Series/1 to attachment feature RAM.

DCB Word	Description
2	Starting address of RAM for write operation
6	Byte count (must be even)
7	Series/1 address (must be even)

- Write RAM and execute - This subroutine transfers a block of data from the Series/1 to attachment feature card RAM and then begins execution.

DCB Word	Description
2	Starting RAM address for data storage and start execution
6	Byte count
7	Series/1 address

- Diagnostic wrap test - This test performs a data wrap by loading data in the tape data output register (on the attachment feature card) and then reading the data back in off the I/O bus. If the data does not compare, an 02 condition code is returned.

- CRC test - This test checks the 4-byte CRC circuitry on the attachment feature. If the test is successful, an 03 condition code is returned. If the test fails, an 02 condition code is returned.

- Read tape status - This subroutine reads tape status, places the bytes in status words 2, 3, and 4, and then writes the words into Series/1 memory at the location specified in the DCB.

TAPE CARTRIDGE DRIVE FORMATTER DATA FORMATTING

The following paragraphs describe the format and recording standard for the tape storage subsystem, which is used for information interchange with the Series/1 processor. Compliance with the standard for the unrecorded magnetic tape cartridge (ANSI X3.55-1977) is a requirement for information interchange.

Recording Code

Each 8-bit data byte is separated into two 4-bit groups (nibbles). Each 4-bit data nibble is encoded into a 5-bit GCR nibble for recording on the streaming magnetic tape cartridge. The most-significant (MS) nibble is recorded first; the least-significant (LS) nibble is recorded last. The encoded data has the property that no more than two consecutive zeros can occur. Table 2-8 is the translation table for data nibbles (B3, B2, B1, B0) and GCR nibbles (G4, G3, G2, G1, G0).

TABLE 2-8. RECORDING CODE

4-Bit Data Nibble						5-Bit GCR Nibble					
Hex	B3	B2	B1	B0		G4	G3	G2	G1	G0	Hex
0	0	0	0	0	<--->	1	1	0	0	1	19
1	0	0	0	1	<--->	1	1	0	1	1	1B
2	0	0	1	0	<--->	1	0	0	1	0	12
3	0	0	1	1	<--->	1	0	0	1	1	13
4	0	1	0	0	<--->	1	1	1	0	1	1D
5	0	1	0	1	<--->	1	0	1	0	1	15
6	0	1	1	0	<--->	1	0	1	1	0	16
7	0	1	1	1	<--->	1	0	1	1	1	17
8	1	0	0	0	<--->	1	1	0	1	0	1A
9	1	0	0	1	<--->	0	1	0	0	1	09
A	1	0	1	0	<--->	0	1	0	1	0	0A
B	1	0	1	1	<--->	0	1	0	1	1	0B
C	1	1	0	0	<--->	1	1	1	1	0	1E
D	1	1	0	1	<--->	0	1	1	0	1	0D
E	1	1	1	0	<--->	0	1	1	1	0	0E
F	1	1	1	1	<--->	0	1	1	1	1	0F

Data Block Format

Figure 2-6 shows the data block format used by the tape cartridge drive/ formatter. Note that the data block consists of a preamble, data block marker, data group, block address group, CRC group, and a postamble.

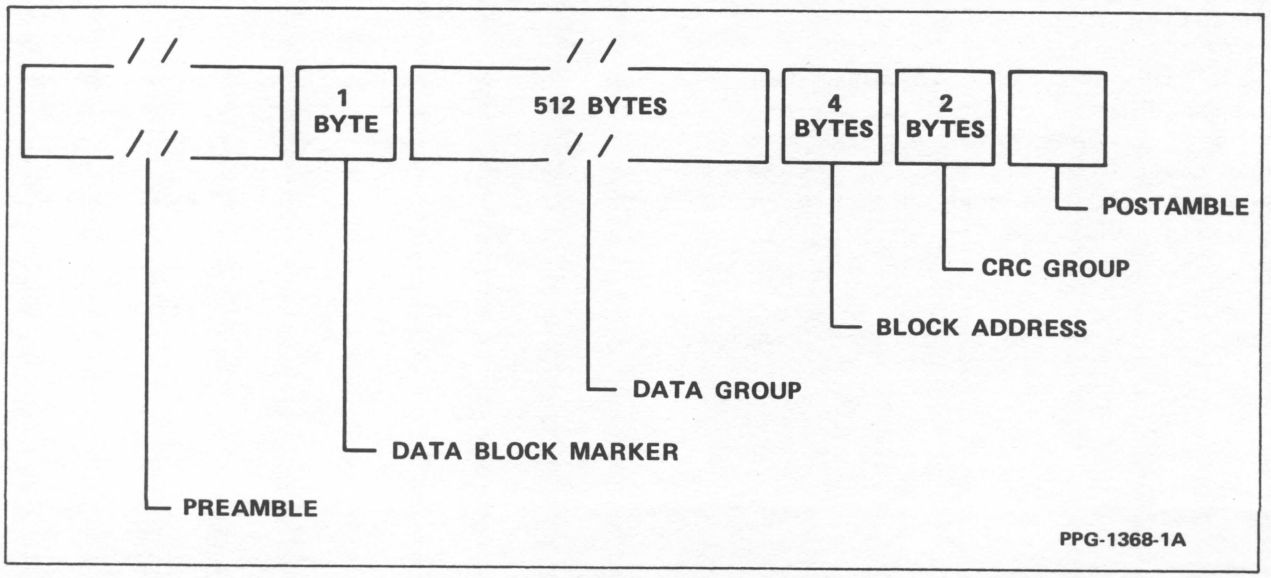

Figure 2-6. Tape Storage Subsystem Data Block Format

Preamble

The tape cartridge drive/formatter's QIC-02/QIC-24 intelligent interface uses three sizes of preambles. These preambles are conveniently labeled the normal, the elongated, and the long preamble.

The normal preamble contains a minimum of 120 and a maximum of 300 flux transitions recorded at the maximum normal recording density of 10,000 flux transitions per inch (394 flux transitions per millimeter). The preamble synchronizes the phase-locked loop (PLL) in the read electronics to the data frequency. The preamble also measures the average preamble amplitude.

The elongated preamble contains a minimum of 3,500 and a maximum of 7,000 flux transitions and precedes the first data block recorded after an underrun.

The long preamble contains a minimum of 15,000 and a maximum of 30,000 flux transitions. This preamble precedes the first data block for interchange recorded at the beginning of a track.

Data Block Marker

The data block marker identifies the start of data. Figure 2-7 shows the GCR pattern of the data block marker.

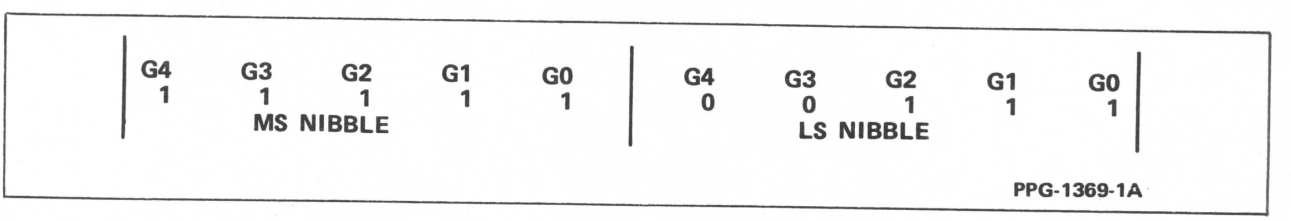

Figure 2-7. Data Block Marker Pattern

Data Block

The data block contains 512 bytes of data for interchange encoded into GCR bytes following the recording code conventions summarized in table 2-8.

Block Address

The block address consists of 4 bytes, which uniquely identify a block recorded on tape. The block address (see figure 2-8) is encoded into GCR bytes following the recording code conventions summarized in table 2-8.

The track number byte (byte 0) of the block address identifies one of nine possible tracks on the tape. Note that even-numbered tracks are recorded serially in the forward direction of tape movement. Odd-numbered tracks are recorded serially in the reverse direction of tape movement. On even tracks, all data for interchange is recorded after the load point (LP) marker and before the end-of-tape (EOT) marker. On odd tracks 3 and 5, all data for interchange is recorded after the early warning (EW) marker and before the beginning-of-tape (BOT) marker. On tracks 1 and 7, however, all data for interchange is recorded between the EW marker and the LP marker. Tracks are recorded sequentially in the following order:

0-->1-->2.....-->8

The significance of the control block portion of byte 1 (upper order bits) of the block address is as follows:

Control Nibble Bits 3 2 1 0	Value	Significance
0 0 0 0	0	The current block contains user data or a file mark.
0 0 0 1	1	The current block contains control information.
(0010 - 1111)	N/A	These are not used.

NOTE

The use of control blocks is optional. A device may recognize and process only blocks with control nibble equal to logical 0 and to ignore all blocks with control nibble equal to logical 1.

Use the address bytes (bytes 2, 3, and the lower order bites of 1) to specify the address of a block on the tape. Number the first block on the tape block 1; sequentially number subsequent blocks. Note that the block address does not reset at the end of a track.

Optional Control Block Data Field

When control nibble block equals logical 1, the current 512-byte data block contains control information. Table 2-9 summarizes the significance of this control information.

TABLE 2-9. OPTIONAL CONTROL BLOCK DATA FIELD SUMMARY

<table>
<tr><th>Byte</th><th>Function</th></tr>
<tr><td>0</td><td>Use byte 0 to define the drive type as follows:

09 hexadecimal = Nine-track device</td></tr>
<tr><td>1</td><td>Byte 0 defines the type of control block used as follows:

<table>
<tr><th>Value Hexadecimal</th><th>Description</th></tr>
<tr><td>00</td><td>No control block is used.</td></tr>
<tr><td>01</td><td>This is the first block on a track.</td></tr>
<tr><td>02</td><td>This is the last block on a track. Use the block to terminate a completed track.</td></tr>
<tr><td>03</td><td>This indicates extended file marks.</td></tr>
<tr><td>04</td><td>This is the partial block count. This indicates that bytes 2 and 3 specify the number of valid data bytes in the following data block. In the data block, the valid data bytes are recorded first, followed by filler characters.</td></tr>
<tr><td>05-1F</td><td>This is reserved.</td></tr>
<tr><td>20-FF</td><td>This is not used.</td></tr>
</table>
</td></tr>
<tr><td>2</td><td>This is the file mark number (MSB) or the number of data bytes (MSB) in the partial block.</td></tr>
<tr><td>3</td><td>This is the file mark number (LSB) or number the of data bytes (LSB) in the partial block.</td></tr>
<tr><td>4-0F</td><td>This is reserved (set to 00 hexadecimal).</td></tr>
<tr><td>10-1F</td><td>This is not defined.</td></tr>
</table>

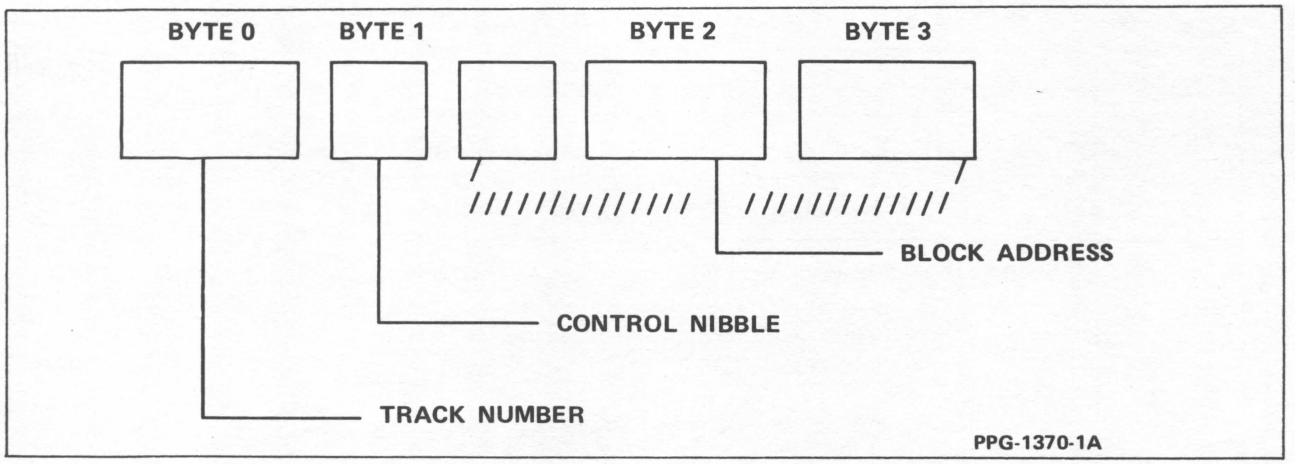

Figure 2-8. Block Address Format

The block address format in figure 2-8 is defined as follows:

Byte	Bits	Function
0	7	Track number bit 7 (MSB)
	6	Track number bit 6
	5	Track number bit 5
	4	Track number bit 4
	3	Track number bit 3
	2	Track number bit 2
	1	Track number bit 1
	0	Track number bit 0 (LSB)
1	7	Control nibble bit 3 (MSB)
	6	Control nibble bit 2
	5	Control nibble bit 1
	4	Control nibble bit 0 (LSB)
	3	Block address bit 19 (MSB)
	2	Block address bit 18
	1	Block address bit 17
	0	Block address bit 16
2	7	Block address bit 15
	6	Block address bit 14
	5	Block address bit 13
	4	Block address bit 12
	3	Block address bit 11
	2	Block address bit 10
	1	Block address bit 9
	0	Block address bit 8
3	7	Block address bit 7
	6	Block address bit 6
	5	Block address bit 5
	4	Block address bit 4
	3	Block address bit 3
	2	Block address bit 2
	1	Block address bit 1
	0	Block address bit 0 (LSB)

Cyclical Redundancy Check Group

The cyclical redundancy check (CRC) group consists of 2 bytes calculated over the 512 bytes of interchange data and the 4-byte block address starting with all logical 1s (CRC initial value). The standard CRC-generating polynominal is then applied as follows:

$$X16 + X12 + X5 + 1$$

The CRC is encoded into GCR bytes in accordance with the recording code conventions summarized in table 2-8.

Postamble

The two types of postambles used are the normal postamble and the elongated postamble.

The normal postamble has a minimum of five and a maximum of 20 flux transitions, which are recorded at the maximum nominal flux density. The normal postamble, which serves as a guard band, is recorded following the CRC.

The elongated postamble has a minimum of 3,500 and a maximum of 7,000 flux transitions recorded at the maximum nominal flux density. The elongated postamble is recorded following an underrun sequence.

File Mark Block Format

The file mark block format is identical to the data block format except that the data field contains 512 bytes consisting of the GCR pattern shown in figure 2-9.

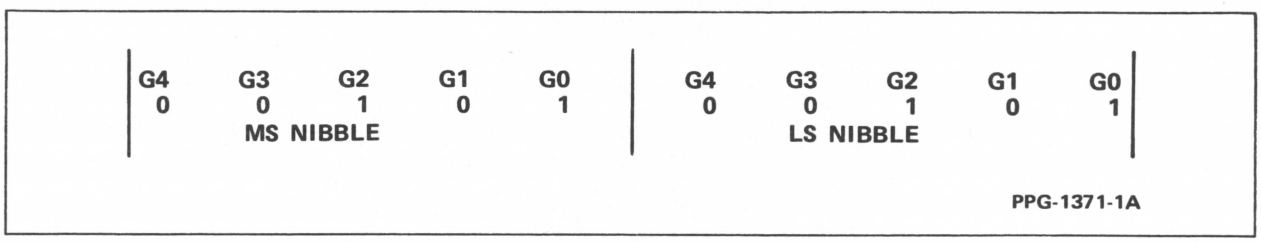

Figure 2-9. File Mark Block Format Pattern

NOTE

The GCR nibble (00101) is converted to the hexadecimal nibble (1111) to form the data field for CRC generation and checking.

Rewritten Blocks

You must rewrite data for interchange to meet the requirements for interchange if all requirements for interchange are not met. You must rewrite each data and file mark block that does not meet the requirements for interchange. A data block is tested for interchange requirements during the read after write check. Begin writing of block N + 1 before completing the read after write check of block N. If block N satisfies the requirements for interchange, the read after write check of block N + 1 is performed. However, if block N does not satisfy the requirements for interchange, rewrite block N after completing the writing of block N + 1.

You can truncate the writing of block N + 1 with the postamble before rewriting block N. Also, rewrite block N + 1 after block N to preserve the sequential order of records. During error processing of block N, you can rewrite block N without rewriting block N + 1. You must rewrite a block in error up to 16 times before the recording operation will be aborted. Figure 2-10 shows various sequences for rewriting blocks.

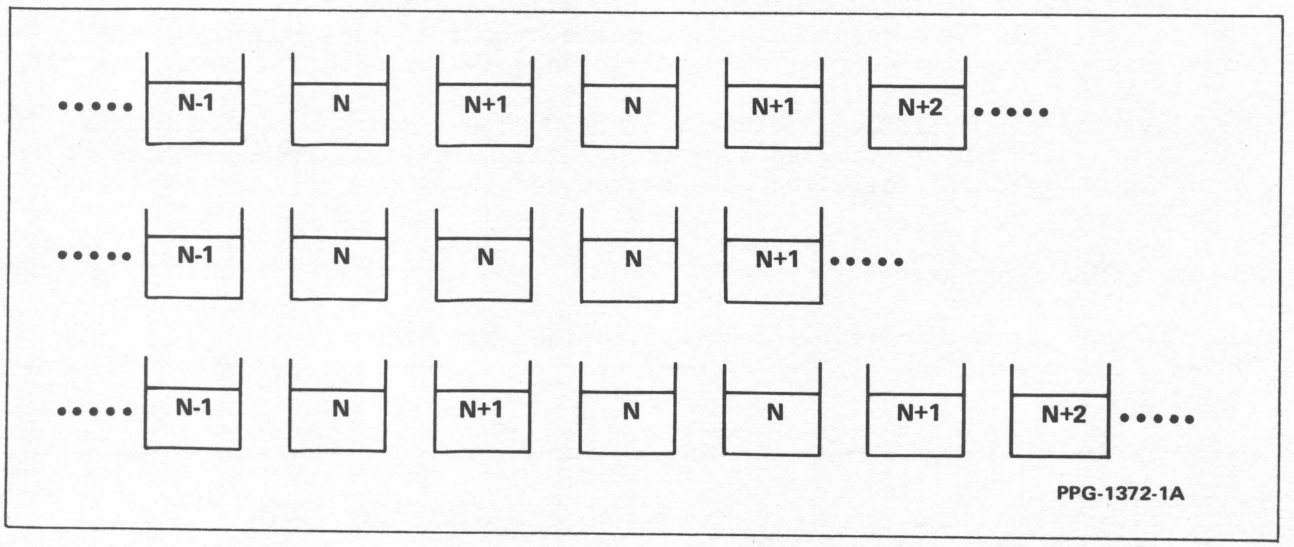

Figure 2-10. Standard Sequence for Rewritten Blocks

Underrun, End-of-File, or End-of-Track

You normally terminate streaming operation when underrun, end-of-file, or end-of-track conditions exist, replacing the normal sequence of recording of blocks N, N + 1, etc. with the sequence of blocks N, N, until the recording of block N meets the requirements for interchange. When block N is recorded such that the requirements of interchange are met, the associated rewriting of block N is completed or truncated. Should these conditions exist, an elongated postamble is written as shown is figure 2-11.

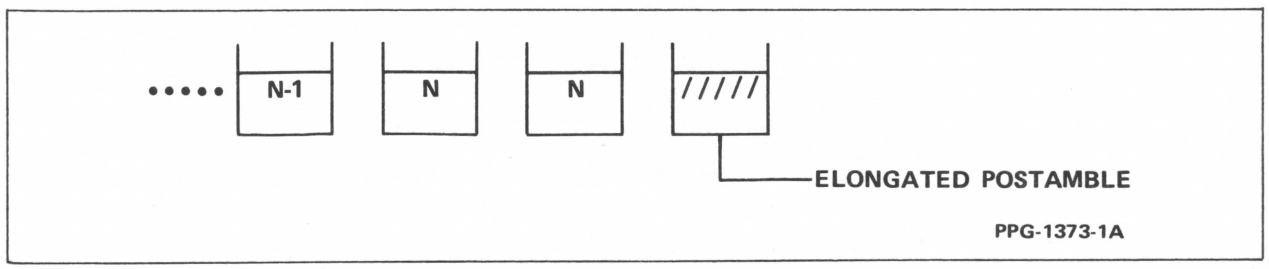

Figure 2-11. Block Format for Underrun, End-of-File, or End-of-Track

Recording in the elongated postamble must begin at 3,000 flux transitions, minimum (3,500 flux transitions maximum), from the end of the block preceding the elongated postamble. An elongated preamble is recorded before recording any other field in the block (see figure 2-12).

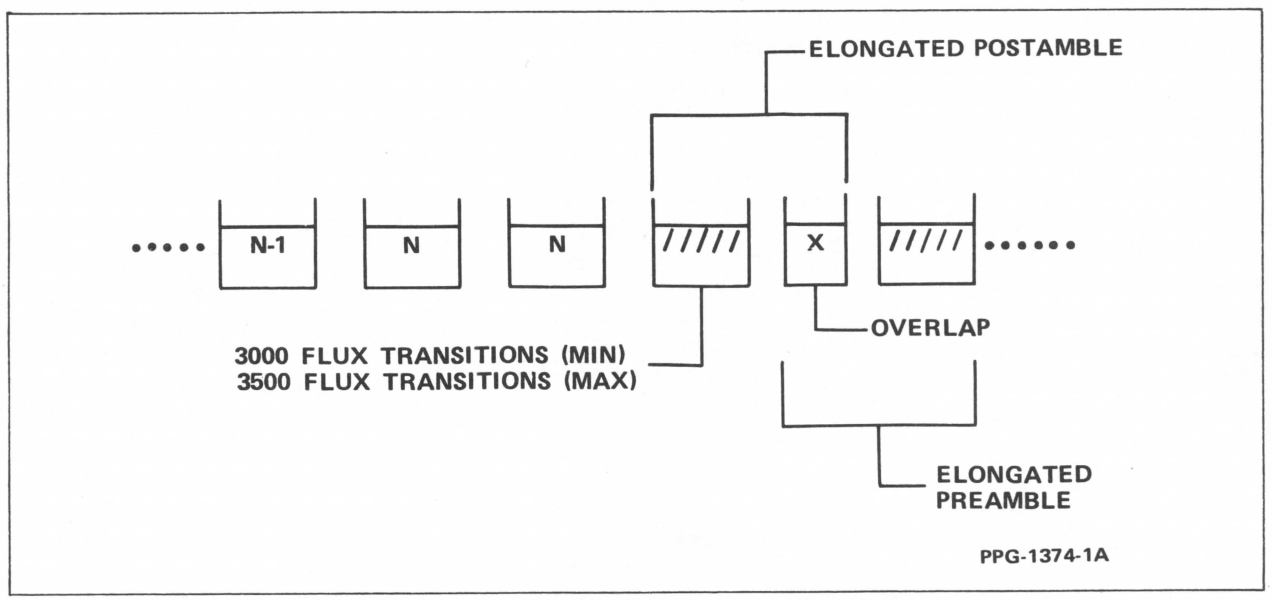

Figure 2-12. Long Postamble Block Format

Forced Streaming

You may optionally prevent termination of streaming operation due to underrun by continued recording of the last block until end-of-file or end-of-track occurs. Standard length format fields are used during forced streaming operations. Figure 2-13 shows the forced streaming block format.

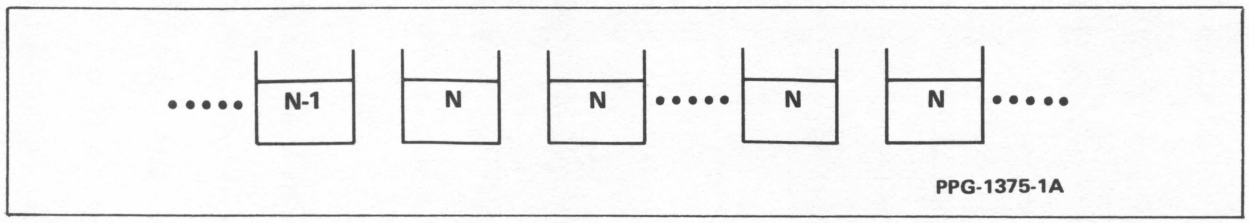

Figure 2-13. Forced Streaming Block Format

End of Recorded Data

On other than the last track, you must indicate the end of recorded data by a valid file mark block (and optional control blocks if used) followed by a minimum of 45 inches of erased track.

Recorded Tracks at Beginning and End of Tape

The following paragraphs provide information on the track reference burst, even-numbered tracks, and odd-numbered tracks.

Track Reference Burst

You must write a track reference burst recorded at the maximum nominal recording density of 10,000 flux transitions per inch (394 flux transitions per millimeter) between the BOT holes and recorded data on track 0. The reference burst starts at a minimum of 0 inches and a maximum of 15 inches from the BOT hole and extends past the load point hole for a minimum of 3 inches and a maximum of 4 inches. A long preamble must precede the first data block.

Even-Numbered Tracks

All even-numbered tracks start a minimum of 3 inches and a maximum of 4 inches past the load point hole. A long preamble precedes the first data block for interchange. On even-numbered tracks, ensure that no data for interchange is recorded beyond a point 36 inches past the early warning hole.

Odd-Numbered Tracks

All odd-numbered tracks start a minimum of 1 inch and a maximum of 2 inches past the early warning hole. A long preamble precedes the first data block for interchange. On tracks 1 and 7, do not record any data for interchange past the load point hole. The last block of data for interchange written on these tracks prior to track switching to the next sequential track should end a maximum of 4 inches and a minimum of 0.1 inches before the load point hole as measured from the center line of the hole. On tracks 3 and 5, you may record data for interchange past the load point hole. Do not record any data for interchange beyond a point 27 inches past the load point hole.

TAPE CARTRIDGE DRIVE/FORMATTER COMMANDS

Table 2-10 summarizes and the following paragraphs describe the attachment feature card/tape cartridge drive formatter command. Note that all commands are single-byte commands. If the tape cartridge drive formatter receives an undefined command code, the formatter returns an illegal command status to the attachment feature.

TABLE 2-10. ATTACHMENT FEATURE/FORMATTER COMMAND SUMMARY

Command Byte	Command Description
0010 0001	RESTORE
0010 0010	ERASE THE ENTIRE TAPE
0010 0100	RETENSION THE TAPE
0100 0000	WRITE DATA
0110 0000	WRITE FILE MARK (WFM)
1000 0000	READ
1010 0000	READ FILE MARK (RFM)
1100 0000	READ STATUS

Power On/Reset

A power-on condition or a pulse on the reset line resets the tape cartridge drive and forces the drive to assert an Exception signal. When the power-on reset times out, or when the reset pulse terminates, the drive formatter initializes operating parameters for subsequent commands. The formatter then waits for the attachment feature card to issue a command. If the command is a READ STATUS command, the formatter executes the command by transferring the six required status bytes and by setting bit 0 of byte 1 (the second byte) to indicate that a power-up or a reset condition has occurred.

READ STATUS Command (1100 0000)

The READ STATUS command provides the attachment feature card with information about the tape cartridge drive. When the card issues a READ STATUS command, the formatter, in turn, transfers the standard 6 status bytes to the attachment feature.

RESTORE (0010 0001)

The RESTORE command positions the cartridge tape to the BOT position.

RE-TENSION Command (0010 0100)

The RE-TENSION command causes tape movement to the BOT position, then to the end-of-tape (EOT) position, and finally back to the BOT position. Before saving data onto a new tape cartridge, execute the RE-TENSION command to alleviate potential tape tension problems.

ERASE Command (0010 0010)

The ERASE command completely erases the tape in the cartridge drive. When executed, the ERASE command moves the tape to the BOT position, activates the erase head, and then moves the tape to the EOT position. Once the EOT is reached, the erase head is deactivated and the tape is repositioned back to the BOT. The ERASE command basically fulfills the requirements of a RE-TENSION command.

WRITE Command (0100 0000)

During a write sequence, the attachment feature card asserts an On-line signal and then issues the WRITE command. Once this occurs, the tape cartridge drive formatter can request and transfer data. The formatter activates the Ready signal when the formatter is ready for a data-block transfer. When Ready is active, the card terminates the transfer of write data by issuing a WRITE FILE MARK (WFM) command. The card can alternatively terminate the transfer of write data by deactivating the ONLINE command. Deactivating the ONLINE command causes a file mark to be written (if not preceded by a WRITE FILE MARK command) and the tape rewound to the BOT.

A WRITE command following cartridge insertion or the issuance of a device reset causes recording to begin at the BOT position. At all other times, recording begins at the current tape position.

NOTE

If the attachment feature card starts transfer between blocks before asserting the Ready signal asserted, Ready may not be asserted.

When the tape cartridge drive detects the early warning (EW) hole of the last track, the drive stops accepting data blocks from the attachment feature card. When this occurs, the tape cartridge drive formatter terminates the WRITE command and reports an end-of-media position with the EXCEPTION and READ STATUS commands.

NOTE

The tape cartridge drive formatter allows the transfer of an additional 1024 bytes of data if a WRITE command has been issued.

READ Command (1000 0000)

During a read sequence, the attachment feature card asserts an On-line signal and then issues the READ command. Once this occurs, the tape cartridge drive formatter can transfer data. The formatter activates the Ready line when the formatter is ready for a data-block transfer. The formatter terminates the READ command if a the formatter detects a file mark. When this occurs, an EXCEPTION and a READ STATUS command sequence notifies the card. When Ready is asserted, the card may terminate the READ command by issuing a READ FILE MARK (RFM) command. If a READ command is issued, the command is accepted and the drive continues the read operation.

A READ command following cartridge insertion or the issuance of a device reset causes the read operation to begin at the BOT position. At all other times, the read operation begins at the current tape position.

NOTE

If the attachment feature card starts transfer between blocks before asserting the Ready signal, Ready may not be asserted.

WRITE FILE MARK Command (0110 0000)

The WRITE FILE MARK (WFM) command causes the tape cartridge drive to write a file mark on the tape.

READ FILE MARK Command (1010 0000)

The READ FILE MARK (RFM) command causes the tape cartridge drive to advance the tape to the next file mark.

TAPE CARTRIDGE DRIVE/FORMATTER STATUS DESCRIPTIONS

Table 2-11 summarizes the tape storage subsystem status bytes. The following paragraphs describe the status bytes. Note that these six bytes groups contain device status, as returned by the READ STATUS Command.

TABLE 2-11. TAPE STORAGE SUBSYSTEM STATUS BYTES

Byte 0	Byte 1	Acronym (EXS)	Description
Bit 01234567	01234567		
		POR	Power on/reset occurred
		RES	Reserved for end of recorded media
		RES	Reserved for bus parity error
		BOM	Beginning of media
		MBD	Marginal block detected
		NDD	No data detected
		ILL	Illegal command
		ST1	Status byte 1 bits
		FIL	File mark detected
		BNL	Bad block not located
		UDA	Unrecoverable data error
		EOM	End of media
		WRP	Write-protected cartridge
		USL	Unselected drive
		CNI	Cartridge not in place
		STO	Status byte 0 bits
MSB	LSB		
Byte 2	Byte 3	DEC	Data error counter
Byte 4	Byte 5	URC	Underrun counter

NOTE

Bytes 0 and 1 contain exception status (EXC) to define the reason that the tape cartridge drive formatter asserted an exception condition.

Status Byte 1

Bit significance for status byte 1 is as follows:

Bit	Status Byte 1
7	POR - The formatter sets the power on/reset (POR) bit after the attachment feature card asserts Reset or when you power up the tape cartridge drive formatter. A READ STATUS command sequence resets the bit.
6	RES - This is reserved.
5	RES - This is reserved.
4	BOM - The formatter sets the beginning-of-media (BOM) bit whenever the cartridge is logically positioned at the beginning-of-tape (BOT), track 0. The bit is reset when the tape moves away from BOT, track 0. This is the only bit in byte 1 that does not set the Exception signal when the bit goes true. A READ STATUS command sequence does not reset bit 4.
3	MBD - The formatter sets the marginal block detected (MBD) bit when the tape cartridge drive formatter determines that a data block is marginal. A READ STATUS command sequence resets the bit.
2	NDD - The formatter sets the no data detected (NDD) bit when an unrecoverable data error occurs due to a lack of recorded data. Absence of recorded data indicates that a data block was not detected during an attachment feature card-generated timeout. A READ STATUS command sequence resets the bit.
1	ILL - The formatter sets the illegal (ILL) bit if one of the following conditions is encountered. A RESET STATUS command sequence resets the bit. • The On-line signal is not asserted when a WRITE, WRITE FILE MARK, READ, or READ FILE MARK command is issued. • A command other than WRITE or WRITE FILE MARK is issued during the execution of a WRITE DATA command sequence. • A command other than READ or READ FILE MARK is issued during the execution of a READ DATA command sequence.
0	ST1 - The formatter sets the status byte 1 (ST1) bit if any other bit in status byte 1 is set.

Status Byte 0

Bit significance for status byte 0 is as follows:

Bit	Status Byte 0
7	FIL - The formatter sets the file mark detected (FIL) bit when a file mark is detected during a READ DATA or READ FILE MARK command sequence. A READ STATUS command sequence resets the bit.
6	BNL - The formatter sets the block-in-error not located (BNL) bit when an unrecoverable read error occurs and the tape cartridge drive/formatter cannot confirm that the last block transmitted was the block in error. A READ STATUS command sequence resets the bit.
5	UDA - The formatter sets the unrecoverable data (UDA) bit when the tape cartridge drive/formatter experiences a hard error during read or write operations. A READ STATUS command sequence resets the bit.
4	EOM - The formatter sets the end-of-media (EOM) bit when the logical early warning (EW) hole of the last track is detected during a write operation. This bit remains set as long as the drive is at the logical end-of-media position. A READ STATUS command sequence cannot reset the EOM bit.
3	WRP - The formatter sets the write-protected (WRP) bit if the tape cartridge write protect switch is set in the file protect Safe position. You must change the position of the write-protect switch before this status bit can be reset.
2	USL - The formatter sets the drive unselected (USL) bit if the drive is not physically connected or is not receiving power. You must correct the condition before this status bit can be reset.
1	CNI - The formatter sets the cartridge not in place (CNI) bit if a tape cartridge is not fully inserted into the drive. You must correct the condition before this status bit can be reset.
0	STO - The formatter sets the status byte 0 (STO) bit if any other bit in status byte 0 is set.

Status Bytes 2 and 3

Status bytes 2 and 3 contain the data error counter (DEC), which accumulates the number of blocks rewritten for write operations or the number of soft read errors detected during read operations. A READ STATUS command sequence clears these bytes.

Status Bytes 4 and 5

Status bytes 4 and 5 contain the underrun counter (URC), which accumulates the number of times that streaming was interrupted because the attachment feature card failed to maintain the minimum throughput rate. A READ STATUS command sequence clears these bytes.

INSTALLATION AND CHECKOUT 3

This section provides information pertaining to the installation and checkout of the tape storage subsystem. Information in this section is divided into the following major areas:

- Tools required for installation
- Packing
- Unpacking
- Primary or initial installation
- Subsystem expansion
- Post-installation checkout

TOOLS REQUIRED FOR INSTALLATION

Tape storage subsystem installation requires standard hand tools, including the following items:

- Knife or diagonal cutters for removing fiber packing materials
- Small and medium flat-blade and cross-point screwdrivers for cabinet access fasteners and cable connector fasteners

CAUTION

Because circuits throughout this subsystem use MOS technology, which is susceptible to damage by excessive static electric charge, always observe MOS circuit-handling procedures when connecting or disconnecting circuit card assemblies, modules, or paths of the subsystem.

PACKING

To protect against shipping damage, always prepare equipment for shipment using only approved procedures and materials.

To obtain proper procedures and materials, contact your nearest Control Data representative or:

Control Data Corporation
Corporate Traffic - HQS07A
8100 34th Avenue South
Minneapolis, Minnesota 55440

Control Data ships the tape storage subsystem as three separate parts:

- Tape cartridge drive enclosure with interface cabling
- Tape storage subsystem attachment feature card
- Installation mounting kit

When shipping any subsystem assembly or component, pack item in the carton which held the replacement. It is good practice to have packing materials on hand at each site to facilitate repackaging of replaceable items. Note that when shipping the tape cartridge drive enclosure, you should package the enclosure in the same manner as it was received from the factory or from your local distributor.

If you must reship the tape cartridge drive enclosure, you may obtain packaging instructions and/or packing materials from:

Control Data Corporation
Central Traffic Services - HQW03C
8100 34th Avenue South
Minneapolis, Minnesota 55440

When you order shipping materials, include the following information with the request:

- Complete shipping address for the materials
- Product number and equipment identification
- Project number and department to be charged

If you must ship the tape storage subsystem attachment feature, pack the card in a heat-sealable, padded envelope and a durable shipping carton designed for shipping circuit cards. Use sufficient filler material around the envelope to prevent card movement after you seal the shipping carton.

UNPACKING

The following paragraphs contain general information useful in unpacking the separate parts of the tape storage subsystem.

UNPACKING THE TAPE CARTRIDGE DRIVE

Control Data ships the tape cartridge drive, with attached formatter circuit card assembly, in a corrugated cardboard container secured with internal, preformed molding. Unpack the tape cartridge drive as follows:

1. Move the tape cartridge drive shipping carton near the Series/1 mainframe.
2. Remove and keep any shipping papers attached to the outside of the shipping carton.

3. Open the outer shipping carton and carefully remove the tape cartridge drive enclosure. Once removed, place the enclosure on a clean work surface.

4. Remove all attaching hardware and any other items that may have been shipped with your particular unit.

5. Remove all packing materials that enclose the tape cartridge drive.

6. Carefully inspect the tape cartridge drive enclosure and other items shipped for possible damage. If shipping damage is evident, file any claim promptly with the transporter involved. If you plan to file a claim, save all original packing and shipping materials.

7. If you are installing the tape cartridge drive in the Series/1 cabinet now, proceed to the Installation subsection for further details. If you are not going to install the unit now, place the drive back into the protective shipping container.

NOTE

If possible, store the original packing materials for future use.

UNPACKING THE TAPE STORAGE SUBSYSTEM ATTACHMENT FEATURE CARD

Control Data ships the attachment feature card in a corrugated cardboard container and an inner heat-sealable, padded envelope. Unpack the card as follows:

1. Move the attachment feature card shipping carton near the Series/1 mainframe.

2. Remove and save any shipping papers attached to the outside of the shipping carton.

CAUTION

Exercise caution when handling the attachment feature card to avoid damaging integrated circuits.

3. Open the outer shipping carton and carefully remove the card. Place the card on a clean work surface.

4. Remove the card from the padded envelope.

5. Inspect the card carefully for possible damage. Things to look for include cracks on the printed circuit board and loose components. If shipping damage is evident, file any claim promptly with the transporter involved. If you plan to file a claim, save all original packing and shipping materials.

6. If you are installing the card in the Series/1 I/O card chassis (or the expansion chassis) now, proceed to the Installation subsection. If you are not installing the card now, rewrap the unit in the padded envelope and shipping carton.

NOTE

If possible, store the original packing materials for future use.

PRIMARY OR INITIAL INSTALLATION

You can install the tape storage subsystem as either a table-top unit or in the Series/1 cabinet. The following paragraphs and procedures provide step-by-step instructions for installing the tape storage subsystem in the Series/1 cabinet or as a table-top unit. These enclosure installation procedures guide the installation of the tape cartridge drive and attachment feature card and routing of the interface cable.

NOTE

You must intall the tape cartridge drive in the right mounting position of the Series/1 cabinet. If the Series/1 contains a flexible disk drive (FDD) in the right position, move the FDD to the left-hand position before you install the tape cartridge drive enclosure. Follow the procedure in the next subsection to move the FDD to the left position.

MOVING FDD

Perform the following procedure to move the FDD from the right mounting position of the Series/1 cabinet to the left mounting position:

1. Remove the decorative front panel from the IBM FDD carefully. When removing the panel, be sure to pull the top half of the panel off first to avoid damaging the securing tab on the top of the panel.

2. Remove the four machine screws that secure the FDD to the Series/1 cabinet.

3. Pull the FDD forward. Lift the back end of the FDD slightly, releasing the FDD from the hold-down on the bottom of the FDD.

4. Remove the two machine screws that secure the ON/OFF switch assembly to the FDD enclosure.

5. Move the ON/OFF switch assembly approximately 1/2 inch to the left, aligning the screw holes with the second set of screw holes. Reattach the two machine screws, securing the ON/OFF switch assembly to the FDD enclosure.

6. Move the FDD to the left mounting position in the cabinet. Resecure the FDD to the cabinet chassis with the four machine screws previously removed.

7. Loosen the four machine screws that secure the black trim panels to the inside of the decorative front panel.

8. Move the black trim panels to the right, approximately 9/16 inch (or as required) to prevent interference with the FDD front door.

9. Retighten the four machine screws that secure the black trim panels.

10. Reinstall the decorative front panel on the Series/1 cabinet. Be sure to replace the bottom half of the panel first, carefully pushing the top half of the panel to avoid damaging the securing tab on the top half.

TAPE CARTRIDGE DRIVE ENCLOSURE INSTALLATION IN THE SERIES/1 CABINET

Perform the following procedure to install the tape cartridge drive enclosure in the Series/1 cabinet. Once installed, follow the cable routing instructions provided in this section to connect the tape cartridge drive to the subsystem attachment feature.

CAUTION

> Power down the Series/1 mainframe before attempting to install the tape cartridge drive. The tape cartridge drive enclosure must occupy the rightmost position in the Series/1 cabinet mounting rack. If another device, such as a flexible disk drive, occupies this position, you must move that other device to the left of the tape cartridge drive.

1. Remove the decorative, snap-on front panel from the section of the Series/1 cabinet where the tape cartridge drive is to be mounted.

2. Remove the protective metal panel located behind the decorative front panel by removing the machine screws (up to eight) that secure the panel to the Series/1 cabinet. The metal panel may not be installed. Retain the removed screws for subsequent installation of the enlosure rack.

3. Install the tape cartridge drive enclosure mounting frame using the eight screws removed in step 2 if the frame is not already in place.

4. Hold the tape cartridge drive so that the tape drive is below the Power ON/OFF switch. With the cartridge loading/unloading slot to the left, slide the tape cartridge drive into the enclosure mounting rack. Note that the tape cartridge drive enclosure must occupy the rightmost position in the enclosure mounting rack (as viewed from the front of the Series/1 cabinet). When sliding the tape cartridge drive into the Series/1 cabinet, make sure that the drive engages the securing clip located on the bottom of the enclosure mounting rack; this clip is used to prevent tape cartridge drive movement.

5. Secure the tape cartridge drive enclosure to the mounting rack by using the two machine screws provided as part of the installation kit.

6. Unless you plan to install or have already installed another peripheral device (such as the CDC WREN Hard Disk Subsystem, Flexible Disk Drive, etc.). Attach the 1/4-inch wide filler panel to the mounting rack just to the left of the tape cartridge drive. Secure the filler panel with the two machine screws provided as part of the installation kit.

7. Attach the new snap-on front panel to the Series/1 cabinet. This panel is provided as part of the installation kit.

8. Open the rear access door of the Series/1 mainframe to gain access to the rear of the tape cartridge drive.

9. Connect the female end of the ac power cord (supplied as part of the installation kit) to the three-prong receptacle located on the outside of the rear panel on the tape cartridge drive enclosure. Connect the male end of the power cord to the designated Series/1 power outlet.

10. Verify that the voltage selected on the two-way voltage selector switch (located next to the ac power receptacle on the rear panel of the tape cartridge drive enclosure) is set to the voltage required (115 Vac or 220 Vac) for operations in your area. If the voltage is not correct (220 Vac visible when 115 Vac you require, for example), reposition the selector switch to obtain the proper voltage.

NOTE

This concludes the procedure for installing the tape cartridge drive enclosure in the Series/1 cabinet. If your tape cartridge drive is to operate as a table-top unit, proceed to the next subsection for instructions on installing the tape storage subsystem attachment feature in the Series/1 and for routing and connection of interface cables.

ATTACHMENT FEATURE CARD INSTALLATION

Install the tape storage subsystem attachment feature card in the Series/1 processor or I/O expansion unit as follows:

CAUTION

Power down the Series/1 mainframe before attempting to install the attachment feature card.

1. Determine from the customer the required location of the card in the Series/1 (either in the processor unit or I/O expansion unit) and the required device address. Note that you cannot assign the tape cartridge drive as an IPL device.

NOTE

The Series/1 processor establishes priority in the order of placement from right to left within the Series/1 mainframe card chassis. The processor unit has higher priority than the I/O expansion unit.

2. If the Series/1 is currently used for system operations, check with the customer before turning the power off. Then, power down the processor unit or I/O expansion unit, as applicable, by pressing the associated power ON/OFF switch.

3. Remove the snap-on cover from the front of the processor unit or I/O expansion unit, as applicable.

4. Open the rear access door of the Series/1 cabinet.

5. Route the tape cartridge drive/attachment feature card interface cable from the tape cartridge drive to the card. Clamp the shields of the cable to the vertical side bracket of the Series/1 frame using the metal cable clamps provided. The clamps must firmly contact the cable shielding to provide proper grounding.

NOTE

If the tape cartridge drive is table-top mounted, route the interface cable through the rear bottom of the Series/1 cabinet. Clamp the shields in the same manner as described in step 5.

6. Attach the pigtail ground lugs of the cable to the ground strip located at the top front of the processor unit or I/O expansion unit, as applicable. If necessary, you can access the ground strip from the front of the Series/1 cabinet by removing the mounting screws at the front of the unit and then sliding the unit forward.

7. From the front of the cabinet, loosen the I/O cable retaining bracket screws located at the top of the applicable unit (processor or I/O expansion unit). Route the attachment cable connector to the front of the chassis and then retighten the retaining bracket screws.

CAUTION

Do not use a lead pencil to set rocker switches. Graphite dust from the pencil can cause an equipment malfunction.

8. Set the card's switches as required (see figure 3-1) with a ball point pen or other suitable device. For example, to select device address 13 hexadecimal, set switches S1-6, S1-9, and S1-10 so that open sides of the switch are pressed down (logical 1), and set switches S1-3, S1-4, S1-5, S1-7, and S1-8 so that the closed sides are pressed down (logical 0).

9. Verify that the SD jumper is configured as shown in figure 3-1.

10. Install the attachment feature card in the Series/1 processor unit or expansion unit. After installation, verify that the card is seated firmly.

CAUTION

If you are installing the card more than one open card slot away from existing attachment cards, you must add a poll propagate jumper between pins M11 and M12 of each open card slot. If you are installing the card in a slot already containing a poll propagate jumper, you must remove the jumper.

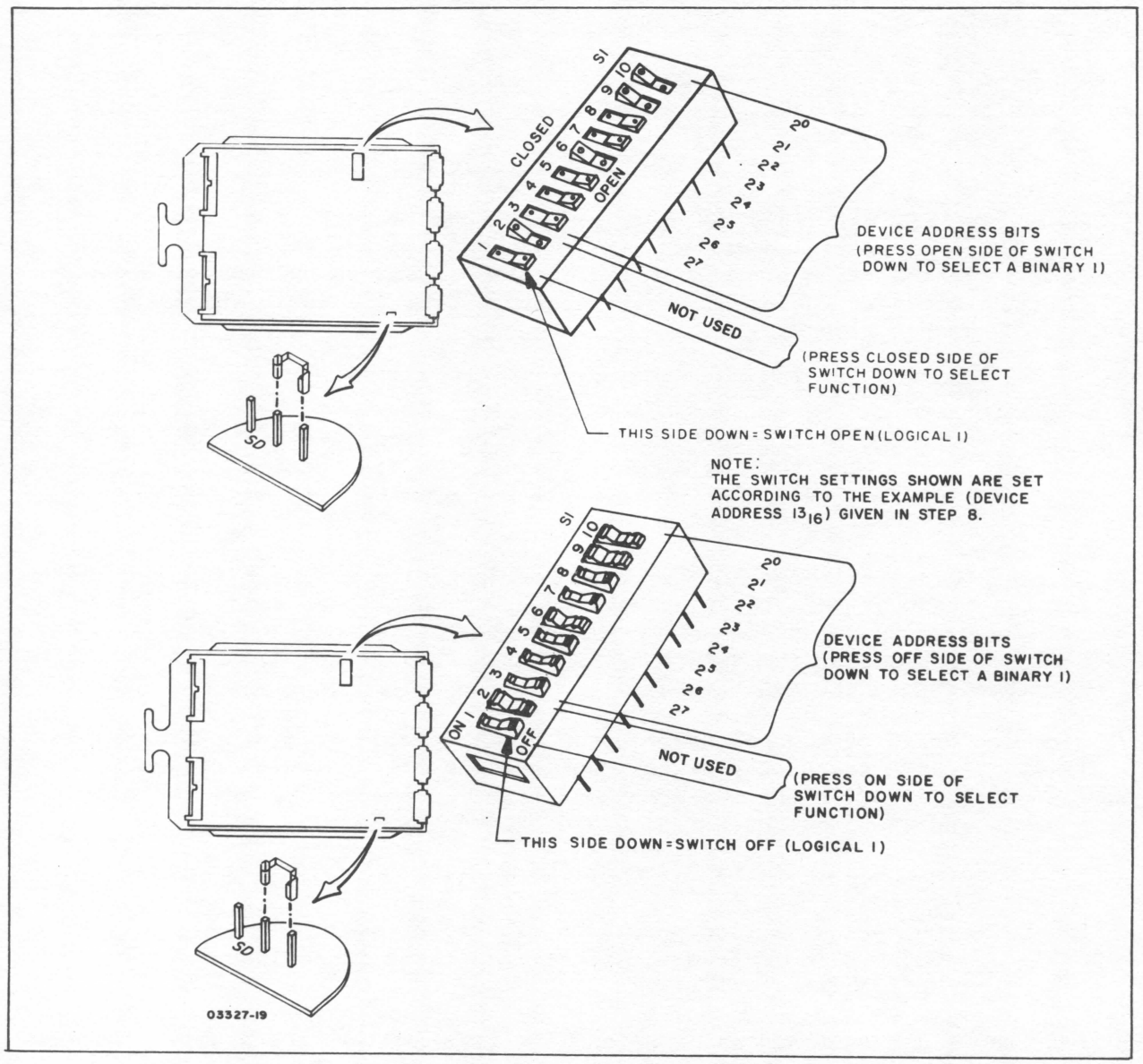

Figure 3-1. Attachment Feature Card Selection Switches

11. Connect the attachment feature card-Series/1 adapter interface cables as shown in figure 3-2. Note that the Bus In cable is connected to the top connector on the card and the Bus Out cable is connected to the bottom connector on the card.

12. If you are installing the card in a Series/1 Model 4952A, skip the following steps and go to step 14. For other models, adjust the overcurrent potentiometer as follows:

    a. Apply power to the Series/1 processor unit (or expansion unit) in which the attachment feature card is installed.

    NOTE

    If chassis power does not come up, turn the overcurrent potentiometer (see figure 3-2) clockwise one full turn; then press the unit power ON/OFF switch to OFF, then to ON. Keep repeating this clockwise adjustment and power sequencing until power comes up.

    b. Turn the overcurrent potentiometer slowly counterclockwise until power goes off. Once power has been removed, turn the potentiometer as follows:

    - For the 125 Watt supply on Series/1 Models 4953-A/C - eight full turns clockwise
    - For the 300 Watt supply on Series/1 Models 4953B/D and 4955-A/B/C/D - four full turns clockwise
    - For the 400 Watt supply on Series/1 Models 4952-B and 4955-E - seven full turns clockwise

    c. Press the power ON/OFF switch on the Series/1 processor to OFF, then to ON. If the check indicator on the Series/1 operator/programmer panel lights following power application, an electrical malfunction exists on the card or a problem has developed in the Series/1. If the check indicator lights, replace the card and retry the sequence. If the error condition persists, remove the card and retry the sequence to determine if the problem is in the Series/1.

13. Check and adjust the +5V potentiometer on Series/1 Models 4952, 4953, and 4955 as follows (no adjustment is required on a Model 4952-A/C):

    CAUTION

    If a probe tip touches a signal and voltage pin at the same time with power applied, the attachment feature card can be damaged.

    a. Turn Series/1 power off.

    b. Remove the Series/1 backpanel cover.

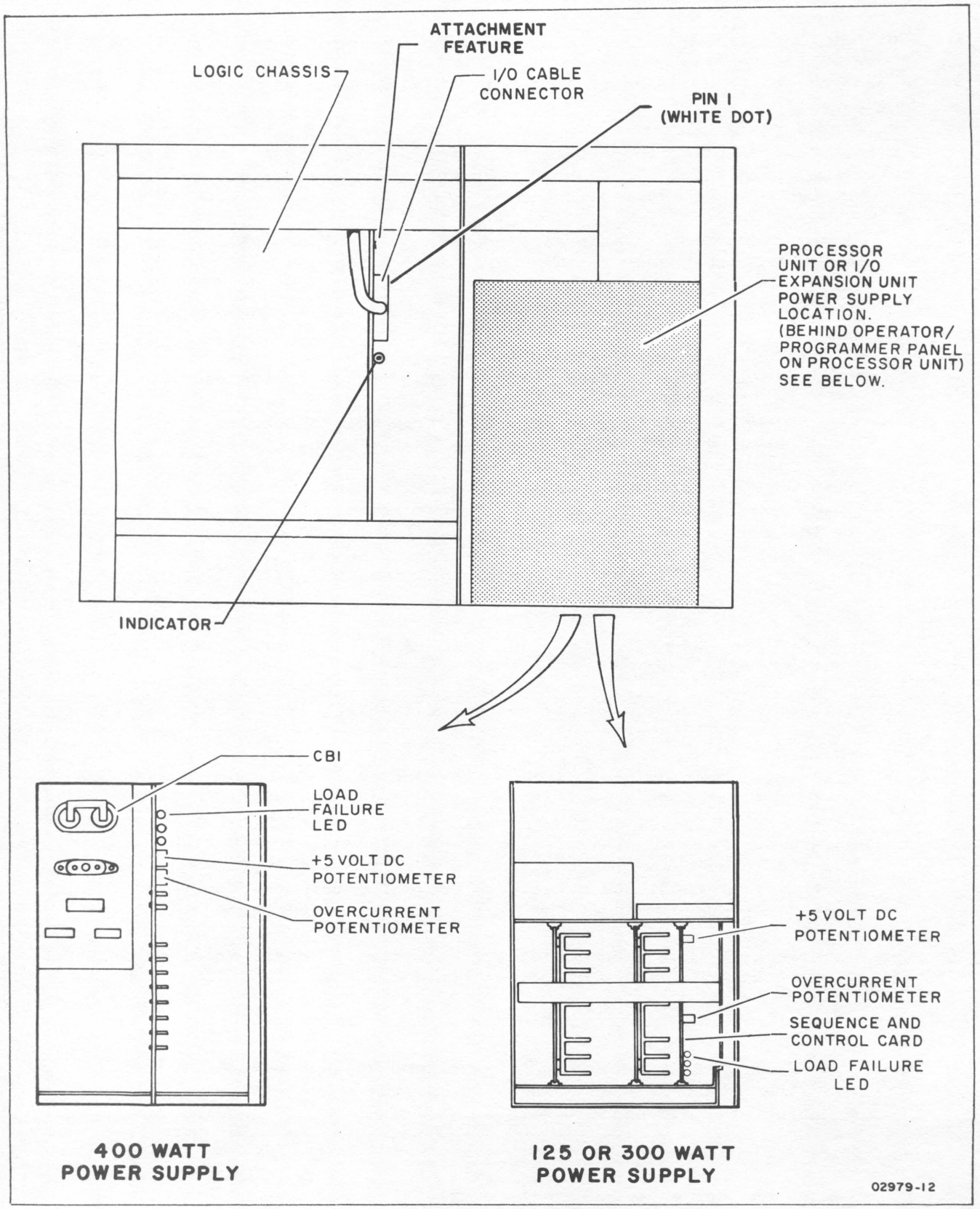

Figure 3-2. Adjustment Potentiometers and Attachment Cable

c. Connect a voltmeter to backpanel pins as follows (refer to figure 3-3 for the backpanel pin configuration):

- +5 Vdc at A2D03
- Ground at A2D08

d. Apply power to the Series/1 and adjust the +5V potentiometer (figure 3-3) for +5V +/-0.5V. Adjust the potentiometer as close to nominal as possible.

e. Turn Series/1 power off, disconnect the voltmeter, and replace the backpanel cover.

f. Reapply power to the Series/1.

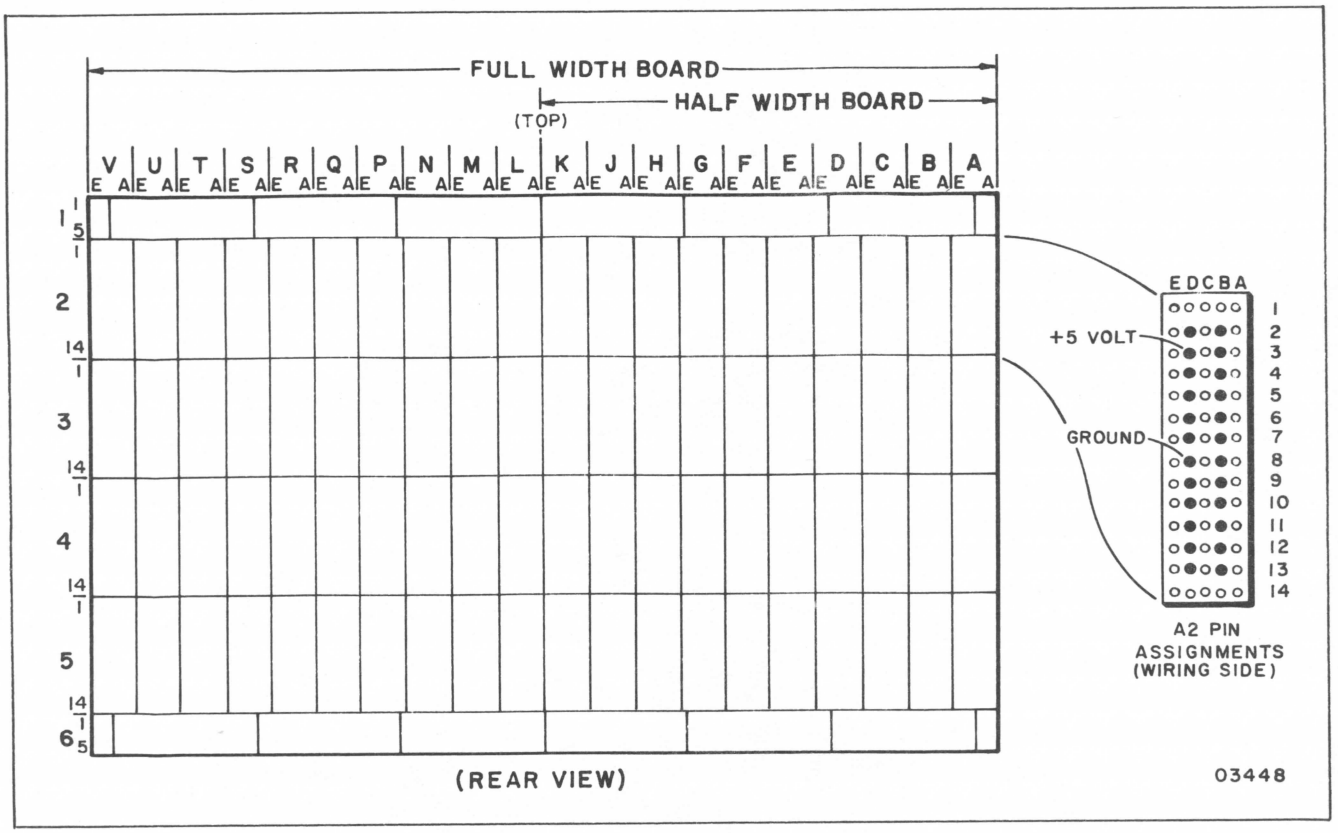

Figure 3-3. Backpanel Pin Configuration

14. Verify that the red LED on the attachment feature card is not lit (LED stays on if a self-test error occurs). If the LED is lighted, replace the card.

NOTE

The following step only applies to the Series/1 Model 4952-A.

15. Verify that the minimum load switch on the Series/1 Model 4952-A is set correctly as follows:

    a. Verify that the Series/1 power ON/OFF switch is in the OFF position.

    b. Remove the rear cover of the Series/1 power supply and lower the hinged transformer box to view the minimum load switch (see figure 3-4).

    c. If four or fewer cards are installed in the logic chassis, set the minimum load switch to the ON (up) position. If five or more cards are installed, set the switch to the OFF (down) position.

    d. Place the transformer box up and replace the cover.

    e. Place the Series/1 power ON/OFF to the ON position. If the check indicator on the Series/1 operator/programmer panel lights following power application, an electrical malfunction exists on the card, or a problem has developed in the Series/1. If the check indicator lights, replace the card and then retry the power-up sequence. If the error condition persists, remove the card and retry the power-up sequence to determine if the problem is in the Series/1.

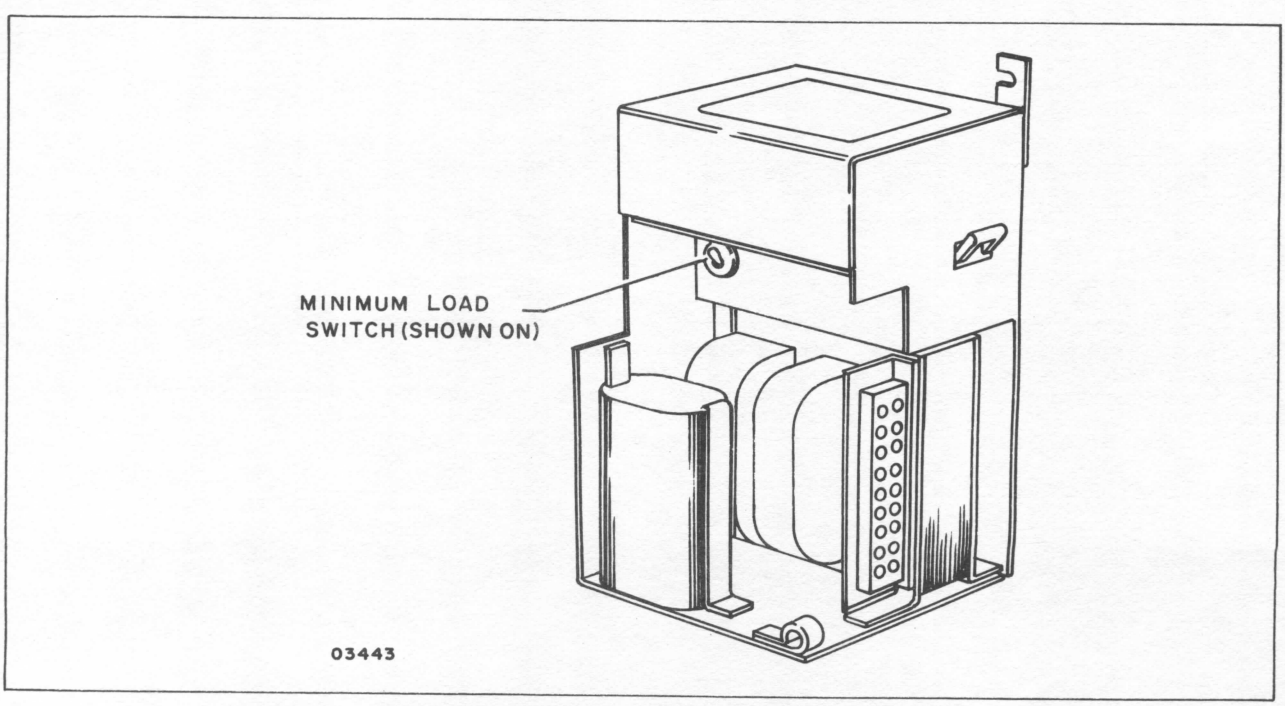

Figure 3-4. Minimum Load Switch, Series/1 Model 4952-A

16. Attach the equipment identification plate and FCO log for the tape storage subsystem as shown in figure 3-5.

17. Replace the front snap-on panel and close the rear door of the Series/1 cabinet.

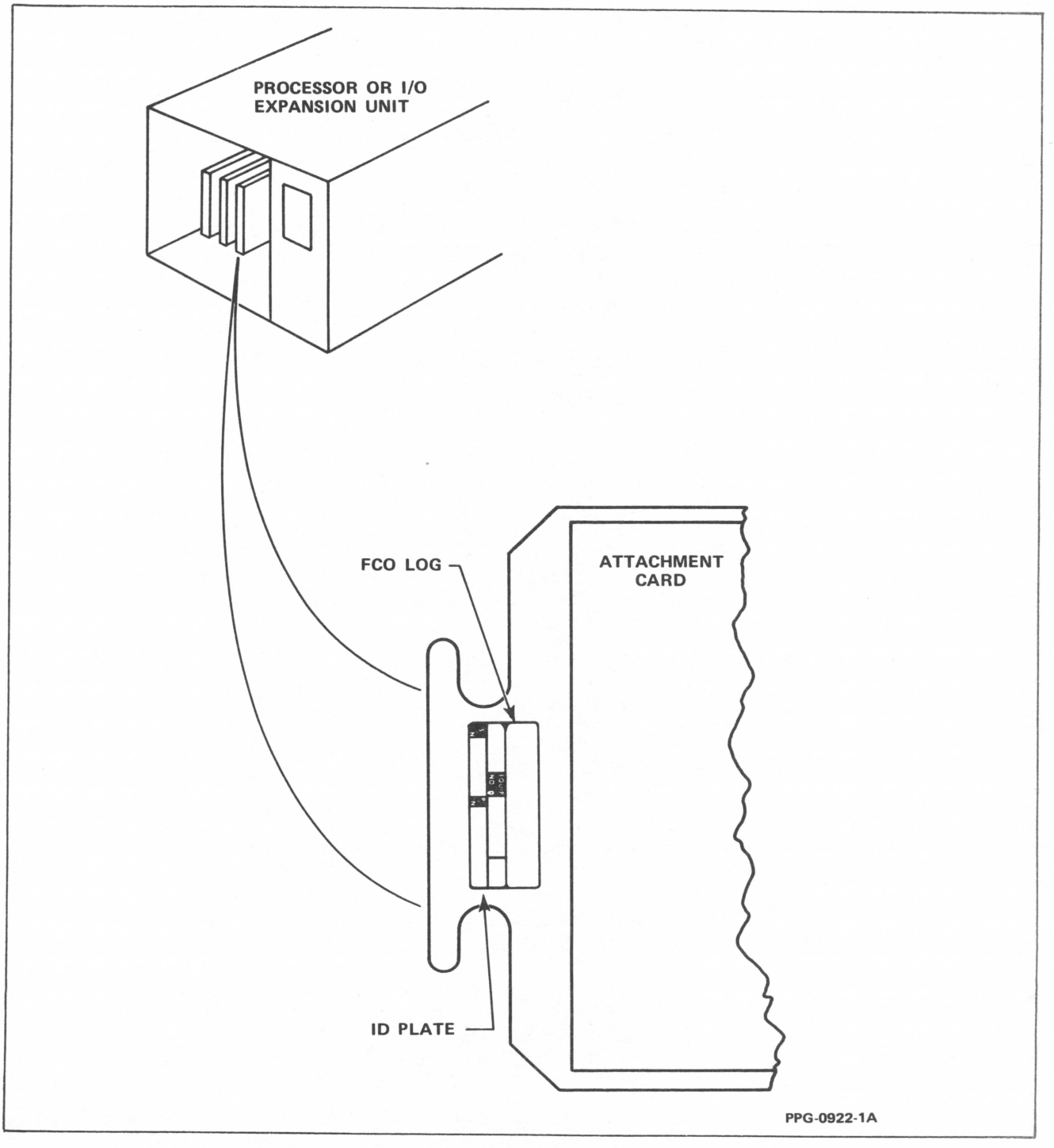

Figure 3-5. Equipment ID Plate and FCO Log Placement

CHECKOUT

Checkout of the tape streamer subsystem involves the following procedures:

- CDC BASIC diagnostic diskette configuration
- Attachment feature card and tape cartridge drive checkout

CDC BASIC DISKETTE CONFIGURATION

This subsection provides information necessary to generate a system configurator table or to add the tape cartridge drive to the existing system configurator table of the CDC BASIC diagnostic diskette.

You must add the tape cartridge drive to the system configurator table on the applicable CDC BASIC diagnostic diskette. The configurator table on each diskette, at a minimum, must contain the configuration information for all devices to be tested by that diskette. The following procedure describes the steps to be used for updating the configurator table either by adding the devices individually or by performing the configure system option (0C).

NOTE

The configurators on IBM diskettes do not recognize CDC devices; therefore, do not attempt to use an IBM configurator to construct the configurator table on a CDC BASIC diskette. All CDC devices will be configured incorrectly in the table.

1. Apply power to the flexible disk drive unit and install the CDC BASIC diagnostic diskette, P/N 663088XX.

NOTE

The CDC BASIC diagnostic diskette has a preassigned alternate console selected for either a CDC 80610 Display or an IBM 4979 Display (AATT = 0442).

2. Place the IPL Source switch on the Series/1 operator/programmer panel to the Alternate or the Primary position, as applicable, to enable loading from the diskette.

3. Place the Mode switch on the Series/1 operator/programmer panel to the Diagnostic position.

4. Press the Load switch on the Series/1 operator/programmer panel to execute the IPL diagnostic that resides on the diagnostic diskette (execution time is approximately 10 seconds). Go to step 4a, 4b, 4c, or 4d, as applicable.

a. If an alternate console is assigned per the preconfigured diskette (see note of step 1), all messages should appear on the assigned alternate console and on the operator/programmer panel, if present.

   1) Appearance of a configurator error message on the CRT screen (3822 on the operator/programmer panel) signifies that the configurator table does not match the system configuration. Ignore this error and go to step 6 to update the table.

   2) If a disconnect customer interface message appears on the CRT screen (382A on the operator/programmer panel), go to step 12.

   3) If any other message appears on the CRT screen (38XX on the operator/programmer panel), this error must be corrected before continuing. Refer to the Common Halt List discussion for a list of error halt codes.

b. If a 80610, 4978, 4979, or TTY display device is present, but no message appears on the CRT screen and an operator/programmer panel is not available, do the following steps to assign an alternate console:

   1) Install an existing diskette (IBM or CDC) that has an alternate console assigned correctly.

   2) Press the Load switch to IPL the diskette.

   3) After completing the IPL, a message appears on the CRT screen. Remove the diskette and install the new diskette that is to be configured.

   4) Enter B38F9 (menu appears on the screen).

   5) Enter F02 to select the patch program option.

   6) Enter F38F1 (dataset name).

   7) Enter F3008 (start address).

   8) Enter F0001 (word count).

   9) Enter the device address and the device type of the desired alternate console that uses the format of FAATT where:

      AA = device address
      TT = device type of alternate console as follows:

      40 for a TTY device
      42 for either a CDC 80610 or an IBM 4979 display
      45 for an IBM 4978 display
      81 for FPMLC with RPQ 2350*
      E6 for Multifunction*
      E8 for ACCA single line*
      E9 for ACCA multi-line*
      EA for FPMLC*

10. If using a 3101 display, use the switch settings in figure 3-6.

THE DIAGNOSTIC TO LOAD AND RUN IS:

A SUPPORTED ALTERNATE CONSOLE IS:			AA** TT**
1310 MULTIFUNCTION	@		AAE6
3101 DISPLAY	@		AA81
3101 DISPLAY ACCA SL	$		AAE8
3101 DISPLAY ACCA ML	$		AAE9
3101 DISPLAY FPMLC	@ &		AAEA
TTY ATTACHMENT	%		AA40
5251 DISPLAY	E400	E400	AAE4 00XY

** AA = CONSOLE DEVICE ADDRESS
** TT = CONSOLE DEVICE TYPE
X = CABLE ADDRESS (0-3) IN REGISTER 1
Y = STATION ADDRESS (0-6) IN REGISTER 1

* @ 3101 SWITCH SETTING CHECKLIST WHEN SUPPORTED BY FPMLC CURRENT INTERFACE, RPQ DQ2350 AND 1310 MULTI FUNCTION.

12345678	12345678	12345678	12345678
X	X	X X	X X
X X	X X		XX

*** & 3101 SWITCH SETTING CHECKLIST WHEN SUPPORTED BY FPMLC WITH RS232C.

12345678	12345678	12345678	12345678
XXX	X	X X	X X
X	X X		XX

* % 3101 SWITCH SETTING CHECKLIST WHEN SUPPORTED BY TTY WITH EIA INTERFACE.

12345678	12345678	12345678	12345678
X		XX	X X
XX	X X	X	XX

% * 3101 SWITCH SETTING CHECKLIST WHEN SUPPORTED BY TTY CURRENT INTERFACE.

12345678	12345678	12345678	12345678
X		XX	X X
XXX	X X	X	XX

Figure 3-6. 3101 Display Switch Settings During Initialization (Sheet 1)

```
***  $ 3101 SWITCH SETTING CHECKLIST WHEN
       SUPPORTED BY ACCA SL - ML EIA RS232C
       12345678 12345678 12345678 12345678
        XXXX              X X      XXX
       X      X  XX                X

       X = SWITCH POSITION.  DO NOT CHANGE
           THE POSITIONS THAT ARE BLANK.
           LEAVE THEM IN THE POSITION
           FOUND.  WHEN DONE, RETURN MOVED
           SWITCHES TO ORIGINAL POSITION.
       3101 BAUD RATE IS 9600 IN THE ABOVE.
     +-------------------------------------+
```

Figure 3-6. 3101 Display Switch Settings During Initialization (Sheet 2)

11) A patch complete message indicates that the new alternate console assignment is written on diskette.

12) Press the Load switch. After completing the IPL, all messages should now appear on the assigned alternate console. Go to step 6 to update the configurator table.

c. If a display or TTY is present and a 3801 halt code appears in the register indicators of the operator/programmer panel, but no message appears on the CRT screen, complete the following steps to assign an alternate console other than the programmer panel:

1) Enter (B),6,(I),(I) to continue.

2) The next halt code is a 382A (secure customer interface), a 3822 (configuration errors on system), or a 382E (option table available for entry).

- If a 382A halt code occurs, secure the customer interface and enter the following:

  (B),6,(I),(I) to advance to 3822 or 382E

- If a 3822 halt code occurs, enter the following to advance to 382E:

  (B),1F,(I),(B),0300,(I),(I)

- If a 382E halt code occurs, enter the following to select alternate console option:

  (B),1F,(I),(B),0400,(I),(I)

3) The next halt code is a 3821 (enter alternate console device address and device type). Enter the following:

(B),1F,(I),(B),AATT,(I),(I)

Where: AA = device address
TT = device type

If a 3829 (no device) halt occurs, an entry error has been made.

Enter the following to continue and reselect the alternate console option:

(B),6,(I),(I)

4) The next halt code is a 382E (the option table is available for entry). Enter the following to write the new alternate console assignment on the diskette:

(B),1F,(I),(B),0D00,(I),(I)

5) Next halt code is a 382C (copy configurator table to another diskette?), enter the following to terminate:

(B),1F,(I),(B),0500,(I),(I)

6) A 3800 or 3805 halt code indicates completion of program terminate function.

7) Press the Load switch to re-IPL. All messages should now appear on the CRT screen of the assigned alternate console. Go to step 5 to update the configurator table.

d. If no alternate display or TTY console is present and a 3801 halt code appears in the indicators of the operator/programmer panel, perform the following steps to change the configurator table manually to assign the operator/programmer panel as an alternate console:

1) To continue, enter:

(B),6,(I),(I)

2) The next halt code is a 382A (secure customer interface), a 3822 (configuration errors on system) or a 382E (option table available for entry).

- If a 382A halt code occurs, secure the customer interface and enter the following to advance to 3822 or 382E:

  (B),6,(I),(I)

- If a 3822 halt code occurs, enter the following to advance to 382E:

  (B),1F,(I),(B),0300,(I),(I)

- If a 382E halt code occurs, enter the following to select assign alternate console option:

  (B),1F,(I),(B),0400,(I),(I)

3) The next halt code is a 3821 (enter the alternate console device address and device type). Enter the following to assign the operator/programmer panel as an alternate console:

   (B),1F,(I),(B),0000,(I),(I)

4) The next halt code will be a 3832 (operator/programmer panel is the assigned alternate console). Enter the following to continue:

   (B),6,(I),(I)

5) The next halt code is a 382E (option table is available for entry). Enter the following to write the new alternate console assignment on the diskette:

   (B),1F,(I),(B),0D00,(I),(I)

6) The next halt code is a 382C (copy the configurator table to another diskette?). Enter the following to terminate:

   (B),1F,(I),(B),0500,(I),(I)

7) A 3800 (ready) halt code indicates the system is ready for any valid input. Go to Changing the Configurator Table Using Operator/Programmer Panel discussed later in this section to update the configurator table manually or to Configure System Option (0C) Using Operator/Programmer Panel to perform configure system option (0C).

5. If the diskette has no configuration errors, enter B38F0 to display the option table.

6. Enter F03 and press the ENTER key on the keyboard of the assigned alternate console to display the option table.

7. Enter F0B to bypass the option table display.

8. Skip steps 9 through 16 if the configurator table is to be updated manually and go directly to step 17.

9. Enter F0C to select the configure system option and follow the series of prompts on the alternate console display. The new configurator table is automatically written onto the diskette.

10. An option to write the configurator table on another diskette or to terminate appears on the CRT screen.

    a. Terminate by entering F05. A PT RDY ENTER then displays on the CRT screen.

11. Enter B38F0 to display the option table.

12. Enter F0B to bypass the option table display.

NOTE

Some CDC and IBM devices have the same read device ID codes assigned. The configure system option assigns CDC device types to all IBM devices that have the same read ID code as the CDC devices. You must change these IBM devices manually in the configurator table. To determine which device types in the table require changing, enter F09 (Print System Equipment) to display all system devices contained. Compare this listing with the customer equipment list to determine which device types to change.

13. Enter F01 to display the configurator table.

14. Enter F03 to select the modify option.

15. Enter the correct device type for each table entry to be modified by following the prompts on the alternate console. Refer to table 3-1 for device type assignments.

TABLE 3-1. IBM/CDC DEVICE TYPE ASSIGNMENTS

Read ID Code	IBM Product	Device Type	CDC Product	Device Type
0406	4979	44	80610	42
0206	4974	64	80420	62
0106	4964	48	80210	46
00AA	4962	78	80230	72
00CA	4962	78	80230	72
0306	4973	68	80450	66
3187	N/A	N/A	80810	59

16. Go to step 20 to verify the configurator table entries.

17. Enter F01 to display the configurator table.

18. Enter F0A (add option), F02 (delete option), F03 (modify option), or any other desired option from the option table, as applicable, to make changes or additions to configurator table.

19. Enter the tape cartridge drive device parameters per the following format and press the ENTER key:

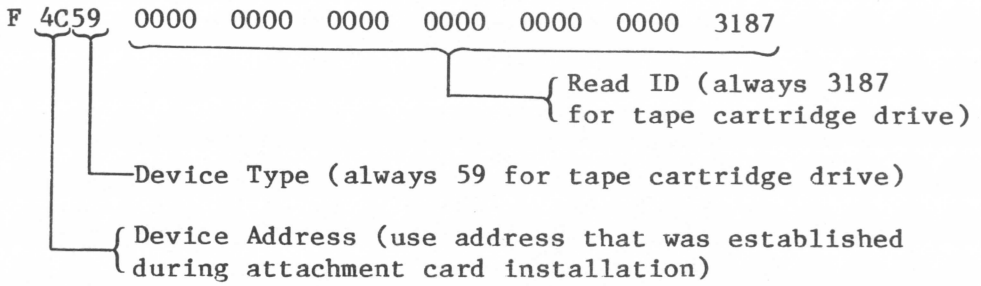

The response to this input is as follows:

```
FUNCTION
ENTER
```

NOTE

You may enter configuration information for all other CDC devices contained in the system at this time. Refer to the applicable site maintenance information manual for individual device entry parameters.

20. Enter F01 and press the ENTER key to display the configuration table. Verify that these parameters were correctly entered.

21. Enter F0D and press the ENTER key to write the new configuration information on the diskette. If additional diskettes are to be written, install the diskette and repeat this step for each diskette.

22. Enter F05 to terminate the program. A PT ENTER message indicates that the terminate function is completed.

ATTACHMENT FEATURE CARD AND TAPE CARTRIDGE DRIVE CHECKOUT

Post-installation checkout consists of loading and executing the tape storage subsystem diagnostics. This is performed as follows:

1. Verify that the tape cartridge drive ac power cord is connected to the designated Series/1 outlet.

2. Place the tape cartridge drive power ON/OFF switch in the ON (up) position.

NOTE

The attachment feature card reads the status bits for the tape cartridge drive only during a Series/1 power-on application. Therefore, apply ac power to the tape cartridge drive before applying power to the card, or you may turn the attachment power source to Off and then to On to obtain the correct status.

3. Power up the Series/1.

4. Insert the tape storage subsystem diagnostic diskette (provided as part of the installation kit) in the Series/1 floppy disk drive (FDD).

5. Depending on what devices have been designated as Primary and Alternate for IPL purposes, verify that the IPL switch is in the correct position.

6. Press the LOAD pushbutton on the Series/1 operator's control panel. Once you have pressed the LOAD button, the Series/1 processor performs an initial program load.

7. Go to the designated operator's data entry console (Viking, TTY, etc.) and wait for the program to begin prompting you for further entries.

NOTE

Refer to the Maintenance section of this manual for information on the various prompts and messages that may be displayed during execution of the diagnostics.

8. Once the diagnostics are executed sucessfully, the tape storage subsystem is ready for on-line operations. Refer to the Standalone Utilities User's Guide, Version 4.0, publication number 60466020, for instructions for using the subsystem for a save operation. Refer to appendix C of this manual to use the EDX utility for save/restore operation.

NOTE

If an error is detected during execution of the tape storage subsystem diagnostics, record the error message displayed and then go to the Maintenance section of this manual for applicable maintenance instruction.

PRINCIPLES OF OPERATION 4

This section provides a description of tape storage subsystem principles of operation. The section first describes general principles of operation for the tape cartridge drive and the formatter circuit card assembly and then describes the subsystem theory. The section also includes the following details:

- Subsystem signals and related timing
- Interface timing
- Tape cartridge tracks

TAPE CARTRIDGE DRIVE GENERAL PRINCIPLES OF OPERATION

The following paragraphs provide a functional description of the tape cartridge drive. The discussions center around the simplified block diagram in figure 4-1.

The tape cartridge drive receives input signals from two primary sources: 1) power input and 2) command signals. The command signals allow the Series/1 operator to input data (save), receive data (restore), detect errors, etc.

The command signals (with the exception of the Read Data and Write Data signals), combined with internally generated signals, provide multiplexed data. The tape cartridge drive microprocessor decodes the multiplexed data and uses the data to command other drive functions. In addition to decoding, the microprocessor also performs the following functions:

- Sends signals to the tape storage subsystem attachment feature
- Receives signals from the drive's sensor assemblies
- Sends signals to the drive motor
- Sends signals to the stepper motor

A crystal oscillator and associated logic control the microprocessor and system timing. A 50-pin connector provides interface between the external host controller and the tape cartridge drive. Table 4-1 lists all internal and external system interface connectors, with accompanying routing information.

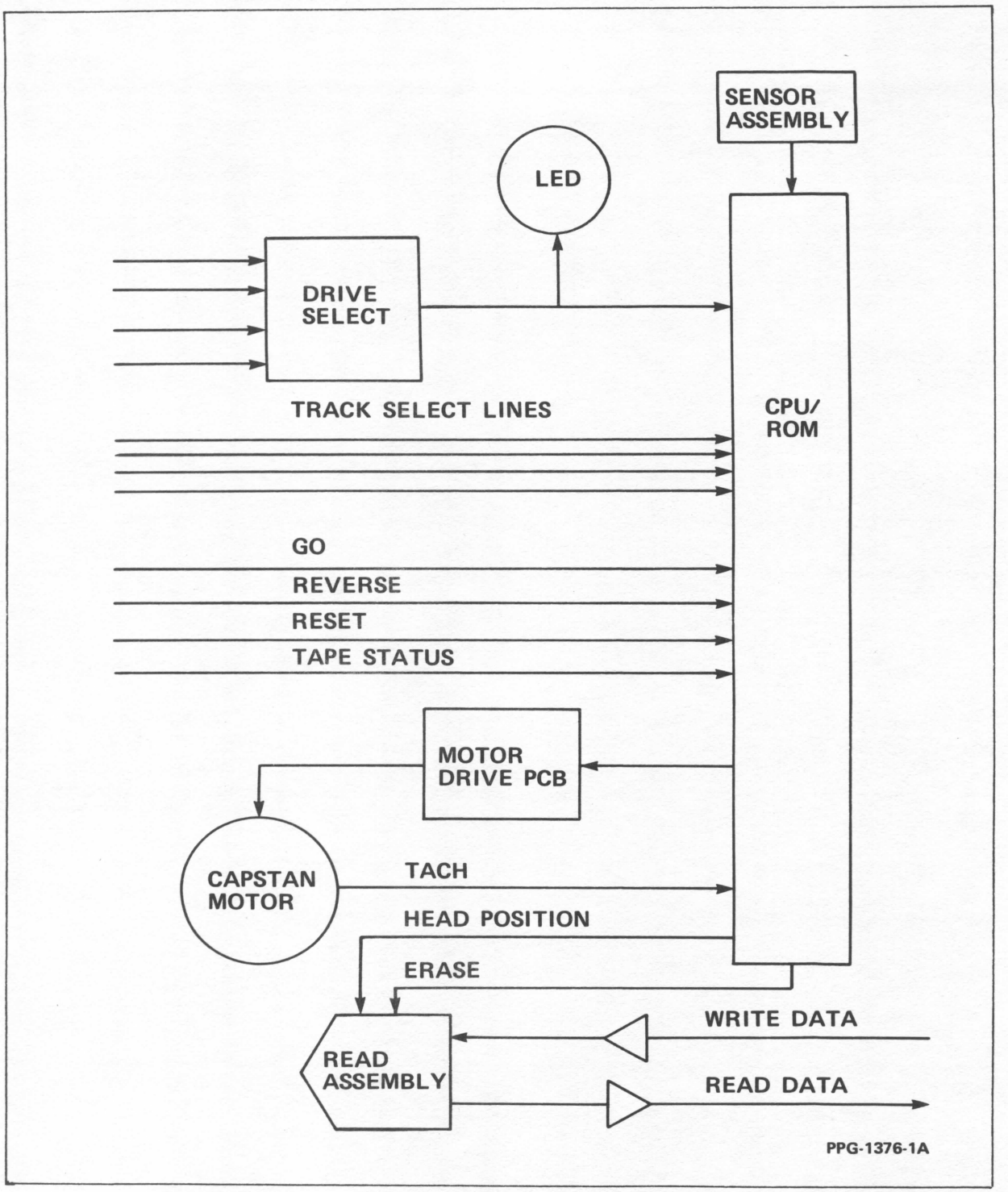

Figure 4-1. Tape Cartridge Drive Simplified Block Diagram

TABLE 4-1. TAPE CARTRIDGE DRIVE INTERFACE CONNECTOR SUMMARY

Connector	Description
J1	To/From Host Controller
J2	Capstan Motor
J3	Tachometer
J4	Sensors
J5	Stepper Motor
J6	Internal Board Connections
J7	Write/Erase Heads
J8	Read Heads

TAPE CARTRIDGE DRIVE

The tape cartridge drive uses an ANSI standard 1/4-inch tape cartridge. The tape cartridge has several distinct physical features designed for industry use. These features, which are described in the following paragraphs, are as follows:

- Three reference locators
- In-position sensor
- Mirror mechanism
- File protect
- Door
- Capstan wheel

Reference Locators

The tape cartridge drive has three reference points positioned on the tape cartridge case to prevent improper insertion into the cartridge drive. A spring-loaded button on the cartridge drive tensions the tape cartridge against all reference points.

In-Position Sensor

The in-position sensor is located on the front surface of the tape cartridge. When a cartridge is positioned in the tape cartridge drive, the in-position sensor routes a signal to the CPU. The signal indicates that the cartridge is in place and that the drive is ready to accept further commands.

File Protect

The tape cartridge contains a rotatable plug that you can manually position. The plug prevents writing or erasing of the tape when the plug is in the SAFE position. When the cartridge drive detects the plug in the SAFE position, the cartridge drive sends the SAFE signal to the CPU.

Mirror Mechanism

The tape cartridge case has a mirror mechanism for system detection of tape position holes. This section contains a full description of this function.

Cartridge Door and Capstan Wheel

The cartridge door and capstan wheel do not have any associated electrical signals; however, they do fit in the overall tape cartridge drive system. The cartridge door, which is designed to protect the magnetic tape during storage and transport, swings open during tape cartridge insertion for positioning of the magnetic head. The capstan wheel controls tape movement when driven by the tape cartridge drive capstan assembly.

SENSOR ASSEMBLY

The sensor assembly detects tape hole positions (BOT, LP, EW, and EOT) that the cartridge drive uses for track location, tape status, and positioning. An infrared transmitter, which is located on the drive housing, emits light to a mirror located opposite the transmitter and within the tape cartridge case. The mirror mechanism in the tape cartridge creates a light field by angling light 90 degrees in the tape cartridge. As the magnetic tape passes through this field, two phototransistors, located within the drive housing, detect the tape holes. The sensor assembly translates the detected light into signals and routes the signals to interface connector J4. Interface connector J4 sends the signals to the CPU for processing. Interface connector J4 also routes the signals Cartridge-In-Place (CIN) and Safe to the CPU.

HEAD STEPPER MOTOR ASSEMBLY

The head stepper motor assembly physically positions the magnetic head to the desired track. Six wires connect the stepper motor through interface connector J5. The assembly converts electrical pulses from the CPU into discrete mechanical movements called steps. These steps are incremented in a logical sequence to act on the internal mechanism components of the stepper motor.

The head-positioning mechanism is a lead-screw type. The stepper motor contains a shaft connected to the motor. A screw attaches a threaded sleeve to the shaft. The magnetic head attaches to the threaded sleeve.

The shaft and screw rotate while the nut moves only up or down. Depending on the sequence of inputs, the stepper rotates the shaft in either a clockwise or a counterclockwise direction. Twenty-four pulses rotate the shaft 360 degrees. Thus, the stepper motor assembly positions the magnetic head accurately and precisely with a minimum of effort.

MAGNETIC HEAD

The magnetic head is compatible with QIC-24 interface data format guidelines. The magnetic head has two-track capability due to two write/read heads and a full-width erase bar. See figure 4-2 for magnetic head layout.

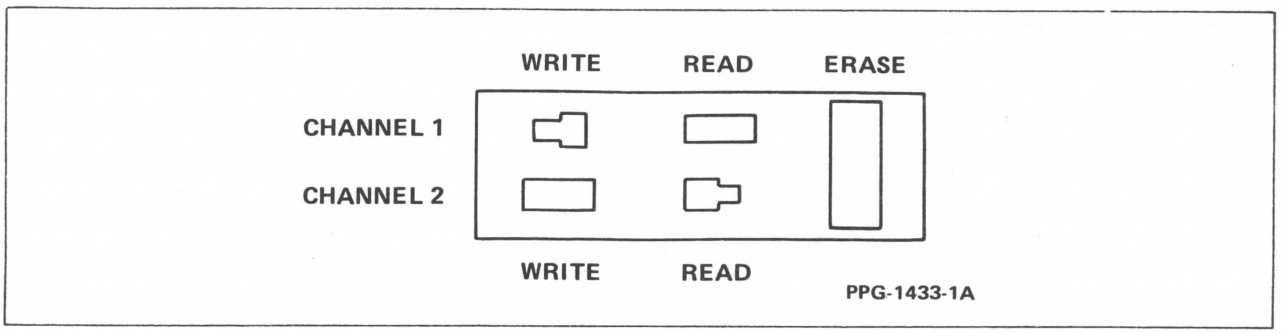

Figure 4-2. Magnetic Head Layout

The magnetic head directly receives the WRITE, READ, and ERASE commands from the formatter. The magnetic head inputs the WRITE DATA and ERASE commands to the write and erase drivers, and then to interface connector J7. The magnetic head outputs the read commands from interface connector J8 to the read amplifier/peak detector. The commands then pass through the time domain filter to I/O connector J1. See table 4-2 for the I/O and interface pin assignments.

The write and erase heads cannot be enabled simultaneously with the exception of track 0 where both erase and write heads are activated. As previously mentioned, the erase function is ac driven. The Clock signal, which is generated by the crystal oscillator and inputted to the CPU, also drives to the erase signal. The read function of the magnetic head detects flux deviations on the magnetic tape as the tape moves under the head. These signals input to interface connector J8. The tape cartridge drive system processes these signals, outputting the signals to the host controller through interface connector J1 as two signals, Read Level Output (RDL) and Read Pulse Output (RDP).

TABLE 4-2. SIGNAL DESCRIPTION

Interface	Pin	Signal	Function
		From Host to CPU	
J1	14	Reset	Clears the CPU for start-up
J1	12, 10, 8, 6	Track	Determines tape track
J1	22, 20, 18, 16	Select	Selects tape cartridge drive unit
J1	4	Rev	Controls direction of capstan motor
J1	2	Go	Controls direction of capstan motor
J1	46	HSPD	High-speed select control
		To Host From CPU	
J1	34	CIN	Cartridge in place
J1	36	Safe	Recording permitted
J1	28	UTH	Upper tape hole position
J1	30	LTH	Lower tape hole position
		Signals From the Sensor Assembly	
J4	3	CIN	Cartridge in place
J4	1	Safe	Recording permitted
J4	7	UTH	Upper tape hole position
J4	5	LTH	Lower tape hole position
		Signals To/From Capstan Motor	
J3	3, 1	TCH	Capstan tachometer pulses
J2	2	FWD	Capstan motor forward
J2	1	REV	Capstan motor reversed
		Signals to Stepper From CPU	
J5	7, 6, 5, 4		Positions stepper motor
J7	3, 7		Step enable
		Signals From Host To/From Magnetic Head	
J1	48	WEN	Write enable control
J1	50	EEN	Erase enable control
J1	40	WDA+	Write data
J1	42	WDA-	Write data inverse
J1	24	RDL	Read level output
J1	26	RDP	Read pulse output

MICROPROCESSOR

The drive microprocessor (referred to as the drive CPU) controls the tape cartridge drive. The drive CPU contains most of the tape cartridge drive control circuitry, including memory and input/output (I/O) control functions from the attachment feature and the tape cartridge drive assemblies. The functions performed by the drive CPU include the following functions:

- Coordinating all system activities and performing functions such as addressing, data manipulation, and arithmetic
- Storing (in both RAM and ROM) the data and software used by the CPU

Major features of the CPU include the following items:

- 8-bit bus architecture
- Clock on pins XTAL connected to an external crystal oscillator
- RESET-active low which initiates the CPU on start-up
- INT-activate low interrupt signal that initiates an interrupt, if enabled
- ALE-address latch enable
- Ports 1 and 2 (read/write ports) control the data
- 1 Kbyte x 8 EPROM
- 64 x 8 RAM
- 27 I/O lines to control the data commands

The drive CPU uses a control program to ensure correct sequencing and coordination of the tape cartridge drive functions. The microcode firmware breaks down into two major sections: the main and subsystem programs. Once a reset has initialized the CPU port, several activities are included in the main program. Some of these activities are as follows:

- Clearing the memory and regulator locations
- Absolute positioning of the magnetic head to track 0
- Scanning for formatter commands

The subsystem subroutines are as follows:

- Absolute positioning
- Stop capstan motor
- Magnetic head up
- Magnetic head down
- Track positioning
- Speed control for the capstan motor
- Scan subroutine to EOT and BOT

FORMATTER GENERAL PRINCIPLES OF OPERATION

The attachment feature interface, data buffer, and read and write sequencers comprise the controller data path. Data transferred between the tape and the attachment feature is handled in DMA fashion. The formatter's onboard microprocessor does not directly handle read/write data. Instead, the microprocessor supervises data transfer via the data path.

The host interface connects the controller internal data buffer and the QIC-02/QIC-24 interface for DMA data transfer operations. In addition, the interface provides the connections between the onboard microprocessor and QIC-02/QIC-24 control signals. Programmed I/O transfers all commands and status information via this path.

A write sequencer is responsible for block sync generation, GCR data conversion, block ID generation and CRC calculation. The formatter's onboard microprocessor controls the write sequencer, which is a direct part of the data path.

The read sequencer is comprised of two major components: the read sequencer logic and data separator PLL. The PLL is responsible for tracking the instantaneous speed variations of the tape media and presenting a stable GCR pattern to the read sequencer logic. The read sequencer logic performs block sync detection, GCR conversion, block address recovery, and CRC calculation and checking.

The microprocessor, through the drive control block, controls the drive selection, track selection, and motor control. The microprocessor also provides the overall intelligence for the controller. This CPU controls the host interface, buffer manager, and read/write sequencer. Two Kbytes of RAM and 8 Kbytes of ROM support the CPU.

SUBSYSTEM PRINCIPLES OF OPERATION

The host controller accepts and sends commands to the drive microprocessor (CPU). RESET, the first command to be input, goes through I/O connector J1-14 to CPU pin 14. The RESET command causes the CPU to perform reset initialization routines. The initialization routines initialize the two ports and clear all memories and registers.

The CPU begins scanning for signals on the 8-bit bus entering from two sources: 1) host controller and 2) sensor assembly. The first signal processed is Cartridge-In-Place (CIN J4-3). This signal informs the CPU that the cartridge is correctly positioned in the tape cartridge drive. The CPU must correctly position the magnetic head on track 0 before ensuing WRITE/READ commands can be enabled. This condition involves coordination of the tape cartridge drive's sensor assembly, capstan motor, and stepper motor.

The host controller initiates the Go (J1-2) and Rev signals (J1-4) by placing these signals on the 8-bit bus. The CPU processes Go and Rev signals and outputs the signals from the main board to the drive board via connector pins J6-1 and J6-2. The signals are then logically applied through integrated circuit U2 and move the capstan motor in either of two directions. Current flows in a clockwise direction through J2-2 (Motor +) or a counterclockwise direction through J2-1 (Motor -). Table 4-3 summarizes applicable motion control logic.

TABLE 4-3. CAPSTAN MOTOR LOGIC

On Bus		On Port	
Rev	Go	FWD	REV
0	0	0	0
1	0	0	0
0	1	1	0
1	1	0	1

Once the tape reaches operating speed, the CPU scans for tape hole locations using signals clocked from the infrared sensor assembly. Infrared light is output from the infrared emitter. Signals returning through connector pins J4-7 (UTH) and J4-5 (LTH) are fed to two comparators and stored in a D-type flip-flop. The CPU scans for these signals and inputs them on the 8-bit bus via pins 17 and 18. When the CPU reads BOT, tape motion stops. The CPU is then ready to position the magnetic head.

CPU port 1, pin 34, generates the Step Enable signal as an active low. The signal is inverted, logically NANDed with CPU-generated stepper control signals, and then output to two places. The two output places are stepper motor connector pins J5-7, -6, -5, and -4 and connector pin J4-1, where the Step Enable signal combines with the Safe signal to disable the WRITE command. The stepper motor receives these signals and initiates rotation of the shaft, which mechanically positions the magnetic head to track 0 on the magnetic tape.

Once the magnetic tape is positioned at the BOT position and the magnetic head is aligned to track 0, the tape cartridge drive is ready to execute WRITE, READ, and ERASE commands. The magnetic head routes WRITE, READ, and ERASE commands directly to/from the formatter. The signals from the host controller include Write Enable control (WEN J1-48), Erase Enable control (EEN J1-50), and Write Data (WDA+ J1-42 and WDA- J1-40).

The Write Enable (WEN) signal and the two write data lines (WDA+, WDA-) control writing to the tape. If the Safe signal is not present, WEN allows current to flow to the selected write head. WDA+ and WDA- directly define the data written.

The Erase Enable signal (EEN) enables the erase function and routes that function through the circuit to output on connector pins J7-6 and -8. The internally generated 3.58-MHz ac signal energizes the erase pole. Selecting track 0 enables the Erase signal on connector pin J7-7 if the Safe signal via connector pin J4-1 is also present.

The magnetic head picks up the Read signal as flux transitions on connector pins J8-8, -2, or -4, and -6. The head first preamplifies the read data, and then passes the read data through a differentiator and filter circuit. The data is again amplified before passing through a comparator and limiter circuit. Data passes through a time domain filter and is output to the host controller as Read Level Output (RDL J1-24) and Read Pulse Output (RDP J1-26).

After the tape cartridge drive reaches operating speed, the CPU monitors the speed using the data routed from the tachometer via connector pins J3-1 and -3. A sensor located on the capstan motor generates the tachometer pulses. The tach signal passes through a series of amplifiers to the interrupt input (INT, active low) of the microprocessor. Note that the CPU automatically adjusts to compensate for speeds that are too fast or too slow.

SUBSYSTEM SIGNALS AND RELATED TIMING

The block diagram in figure 4-1 shows the functional building blocks for the tape cartridge drive. Note that the CPU executes a recalibration and initialization algorithm on power up, reset, and cartridge insertion that lasts for approximately 3 seconds.

The CPU then begins to scan (at a 3.2-ms rate) the host control signals. Scanned signals SLD, TRI, REV, GO, and HSD initiate the drive control functions in the following priority: (1) track positioning, (2) tape hole responses, and (3) motion control. The CPU aborts scanning operations whenever performing track positioning and tape start/stop operations.

CAPSTAN MOTOR CONTROL

The Go control, Direction control, and High Speed Select lines control the motion of the capstan motor. Figure 4-3 shows typical tape motion control timing. Assertion of the Go signal, when found by the scan, causes tape motion in the direction specified by the state of the Rev signal. High Speed (HSD) is tested at the same time the Go signal is asserted and continues in the high-speed mode until tested again. When the tape is in motion, you can change the state of TRI and REV. Changing the state of TRI causes a track-positioning sequence to occur. The associated algorithm causes the tape to halt, track positioning to occur, and the tape to start in the same direction. Changing the state of the Rev signal causes tape motion to stop and restart in the reverse direction. The removal of the tape cartridge causes the capstan motor to stop. An overcurrent circuit protects the capstan motor if you install a defective tape cartridge.

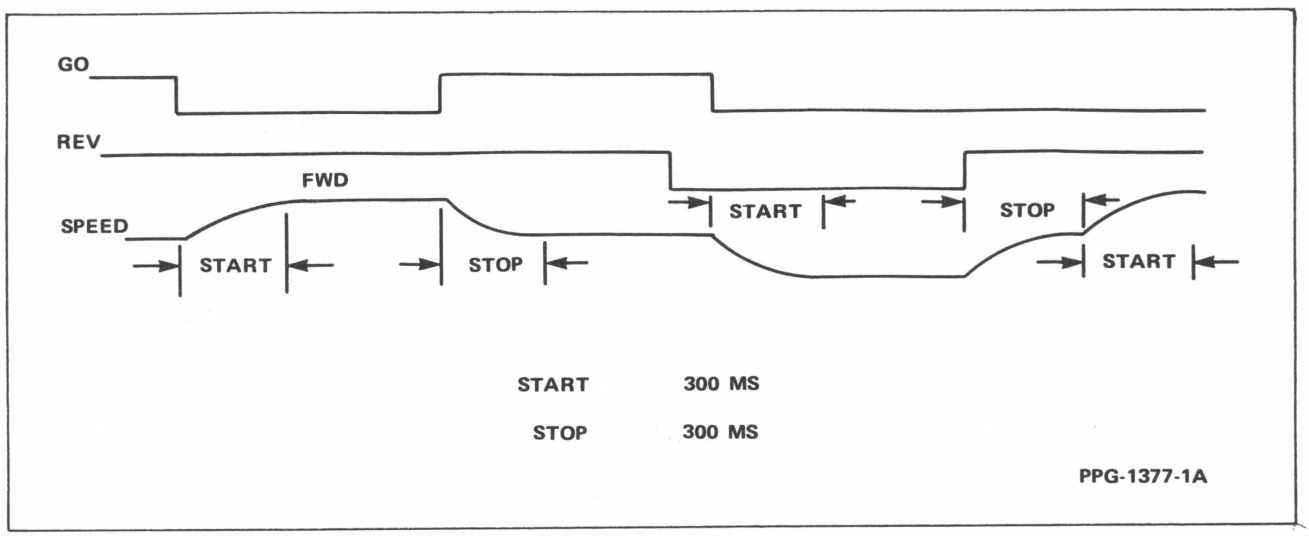

Figure 4-3. Motion Control Timing

TAPE POSITIONING

The drive's microprocessor generates tape position code signals UTH, LTH. Table 4-4 defines and figure 4-4 illustrates the significance of these signals.

When you insert a new cartridge into the drive, the position of the tape within the cartridge is unknown. For this reason, the microprocessor allows the host to move the tape to the EOT or BOT position. Using the appropriate commands, the host moves the tape to the BOT position where the microprocessor asserts the UTH and LTH signals and enables a tape stop sequence. If the scanning operation does not detect an additional motion command(s), the tape moves forward until the operation senses BOT. The scanning operation immediately stops when it senses BOT.

TABLE 4-4. TAPE POSITION CODE SIGNAL SUMMARY

Signal		Description
UTH	LTH	
1	1	Beginning of tape position
0	1	End of tape position
1	0	Warning zone
0	0	Recording zone

After tape motion starts, the host can detect the warning zone. The host can then detect the recording zone, followed by the warning zone and EOT from which a tape stop sequence can be initiated. If the Rev and Go signals are not asserted, the tape is moved until EOT is detected and then immediately stopped. If the Rev and Go signals are then asserted, reverse tape motion occurs. This motion is analogous to the sequence in the forward direction as previously described.

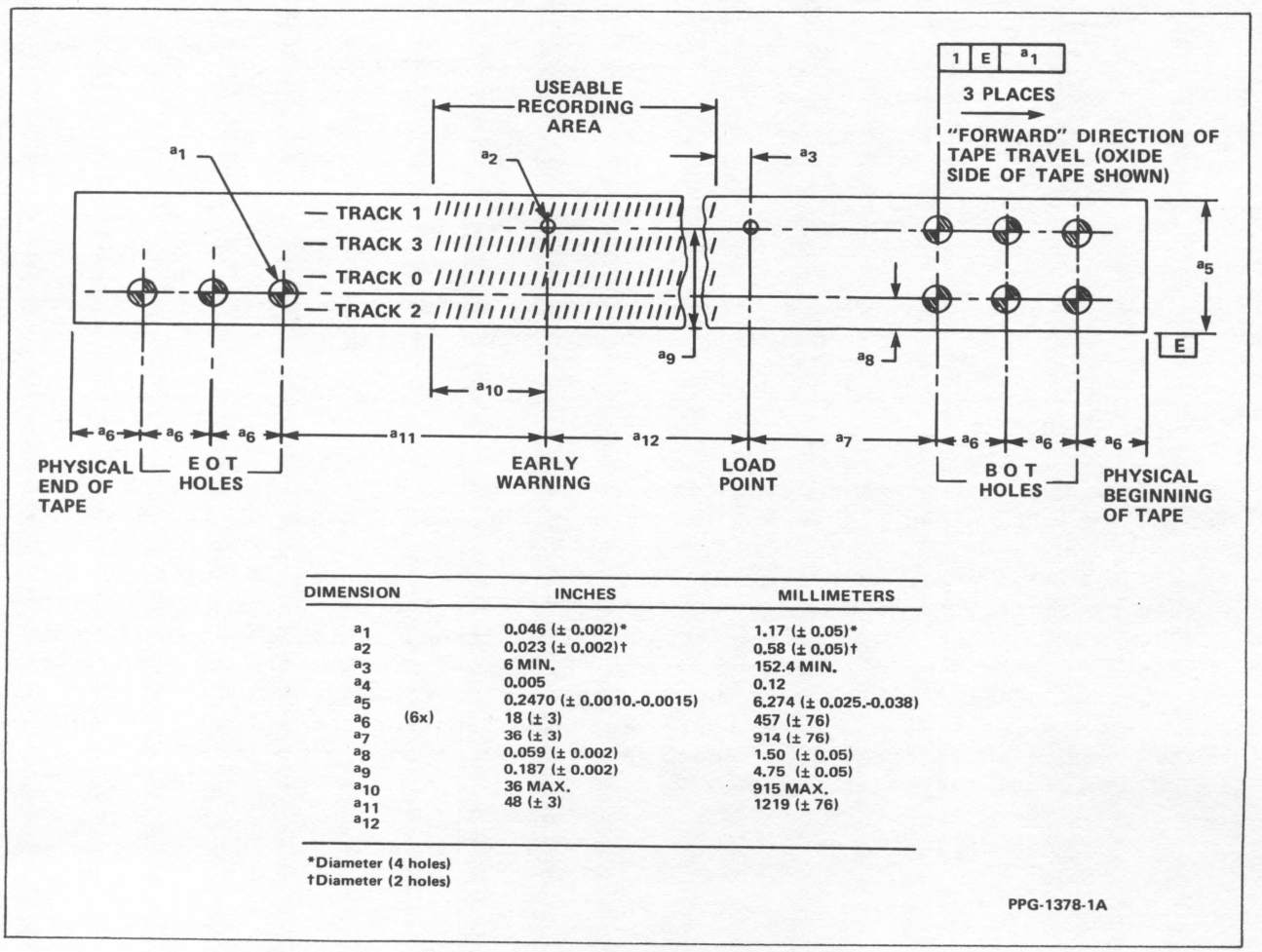

DIMENSION		INCHES	MILLIMETERS
a_1		0.046 (± 0.002)*	1.17 (± 0.05)*
a_2		0.023 (± 0.002)†	0.58 (± 0.05)†
a_3		6 MIN.	152.4 MIN.
a_4		0.005	0.12
a_5		0.2470 (± 0.0010.-0.0015)	6.274 (± 0.025.-0.038)
a_6	(6x)	18 (± 3)	457 (± 76)
a_7		36 (± 3)	914 (± 76)
a_8		0.059 (± 0.002)	1.50 (± 0.05)
a_9		0.187 (± 0.002)	4.75 (± 0.05)
a_{10}		36 MAX.	915 MAX.
a_{11}		48 (± 3)	1219 (± 76)
a_{12}			

*Diameter (4 holes)
†Diameter (2 holes)

PPG-1378-1A

Figure 4-4. Tape Hole Positioning

TRACK AND HEAD SELECTION

Track Select Bit 1, Track Select Bit 2, and Track Select Bit 3 signal lines perform track selection. Track positioning takes a nominal 500 ms per track.

CARTRIDGE-IN-PLACE

The Cartridge-in-Place (CIN) signal, a tape cartridge drive-generated signal, indicates whether the cartridge tape has been inserted correctly into the drive.

RESET

Reset (RST) is an attachment feature card-generated signal. When initiated, RST performs the same sequence as a power-up routine. Typically, the RST signal is active for a minimum of 300 us.

UNSAFE

Unsafe (USF), a tape cartridge drive-generated signal, indicates whether you can write on the tape cartridge that is inserted. The tape cartridge drive enables the USF signal whenever the file protect tab on the tape cartridge is not positioned in the SAFE position.

TACHOMETER PULSES

The tape cartridge drive generates the tachometer pulses (TCH). Each pulse equals 145 mils ($\pm$3 percent) of tape movement.

WRITE AND ERASE CONTROLS

The interface signals that control the write and erase circuitry (figure 4-5) are Write Enable Control (WEN) and Erase Enable Control (EEN). The state of the Write Data signal (WDA+, WDA-) determines whether positive or negative current flows through the desired head. The interface signals allow only the inverse states of the write data signal pair.

The writer drivers are disabled during a power-up/down cycle and while the SAFE switch is activated. The erase function is enabled by EEN such that an internally generated 3.58-MHz ac signal is used to drive the erase pole.

READ DATA

Figure 4-6 illustrates read data circuitry. The circuitry amplifies data read from the cartridge tape, passes the data through a differentiator and filter circuit, amplifies the data again, and then routes the data through a comparator and limiter circuit. The circuitry then digitizes the resultant signal prior to sending the signal to the attachment feature card via the Read Level Output (RDL) and Read Pulse Output (RDP) signal lines.

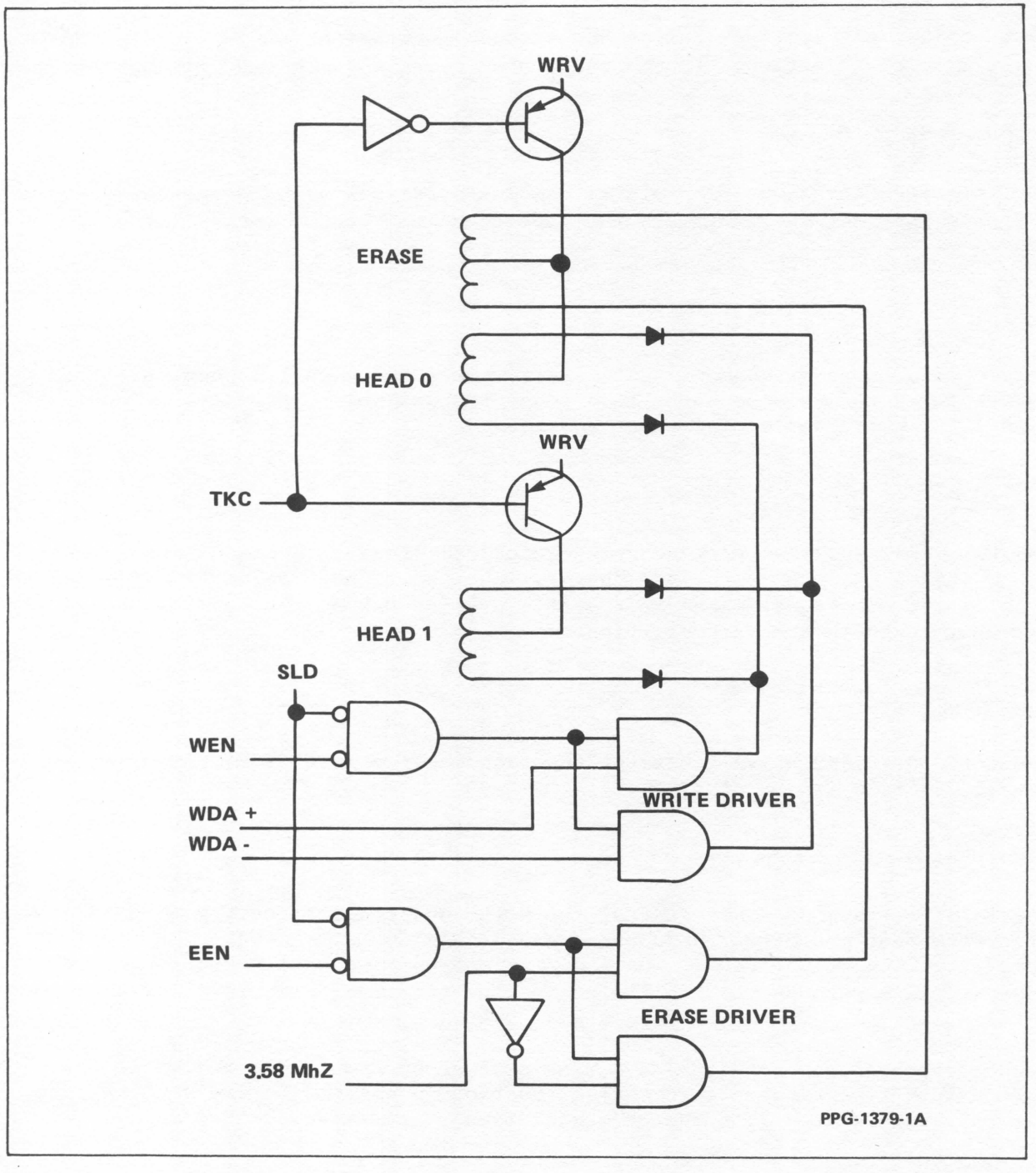

Figure 4-5. Write and Erase Controls

Peak shift data is as follows for recording areas where the signal amplitude is less than 25 percent of nominal:

±0.41 secs (at 90 ips)

In areas where signal amplitude is greater than 25 percent of nominal, peak shift may be up to +one-half of a data transition period.

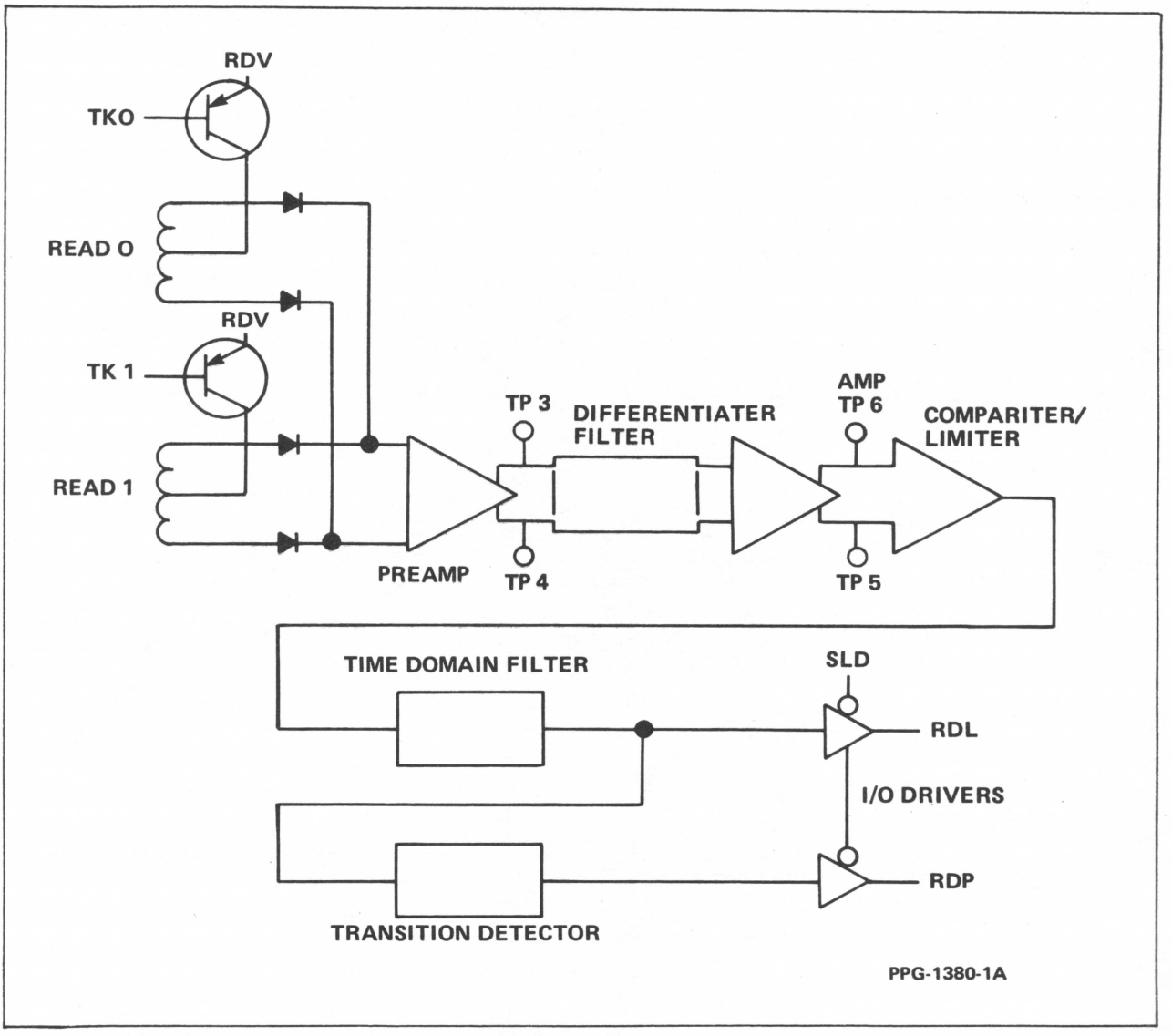

Figure 4-6. Read Data

INTERFACE TIMING

The following paragraphs specify interface signal timing. Specifically addressed is information related to:

- Reset timing
- Read status timing
- SELECT command timing
- POSITION command timing
- Write data timing

- Read data timing
- WRITE FILE MARK command timing
- READ FILE MARK command timing

RESET TIMING

Figure 4-7 illustrates reset timing. As indicated in the diagram, the attachment card is required to maintain a reset assertion for at least 25 μs.

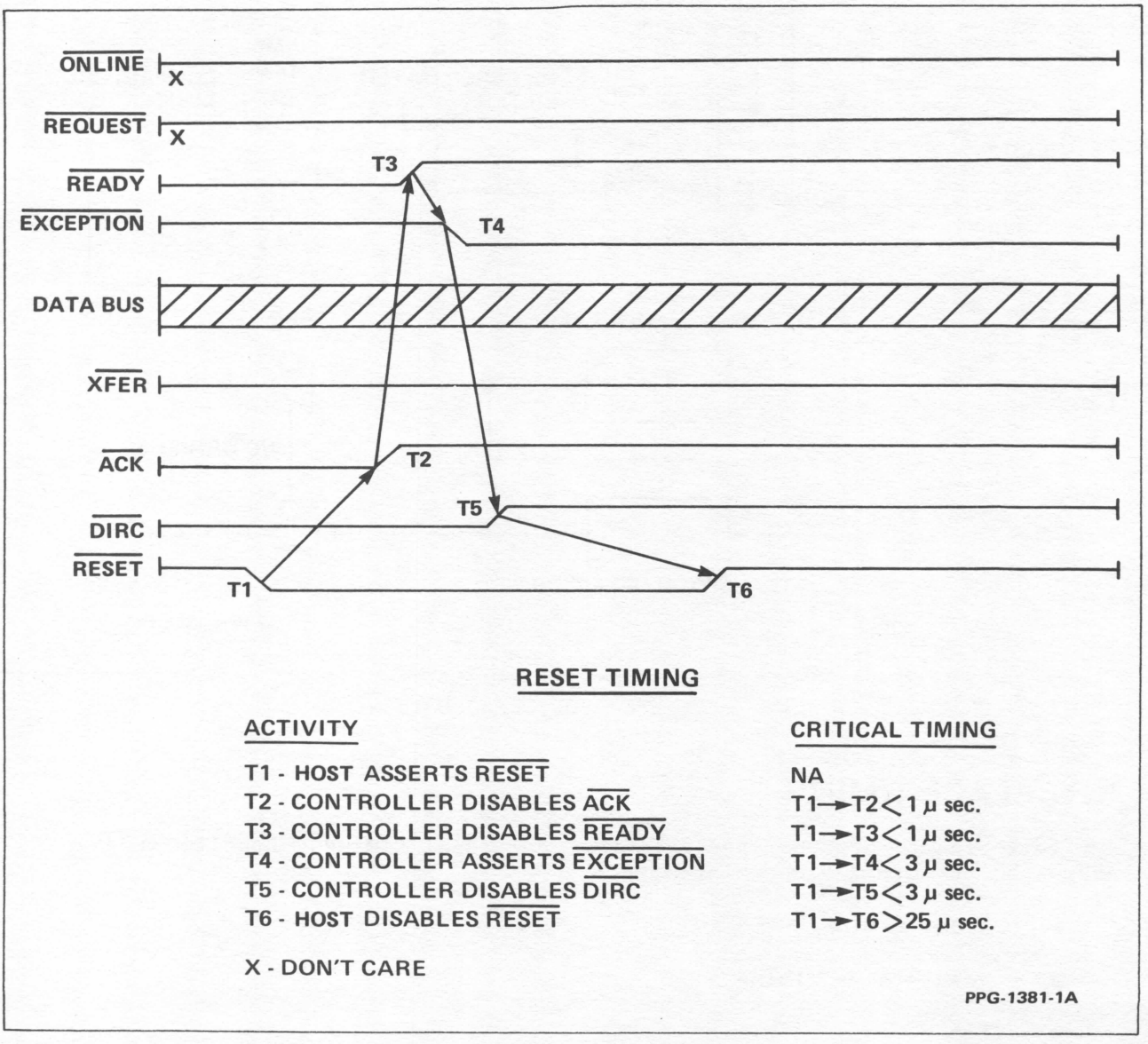

Figure 4-7. Reset Timing Diagram

READ STATUS COMMAND TIMING

Figure 4-8 illustrates READ STATUS command timing. A hardware reset or a power-on reset (generated by the tape cartridge drive) causes generation of an exception condition. Assertion of the Exception signal on the interface shows the exception condition. The attachment card clears Exception by executing a READ STATUS command.

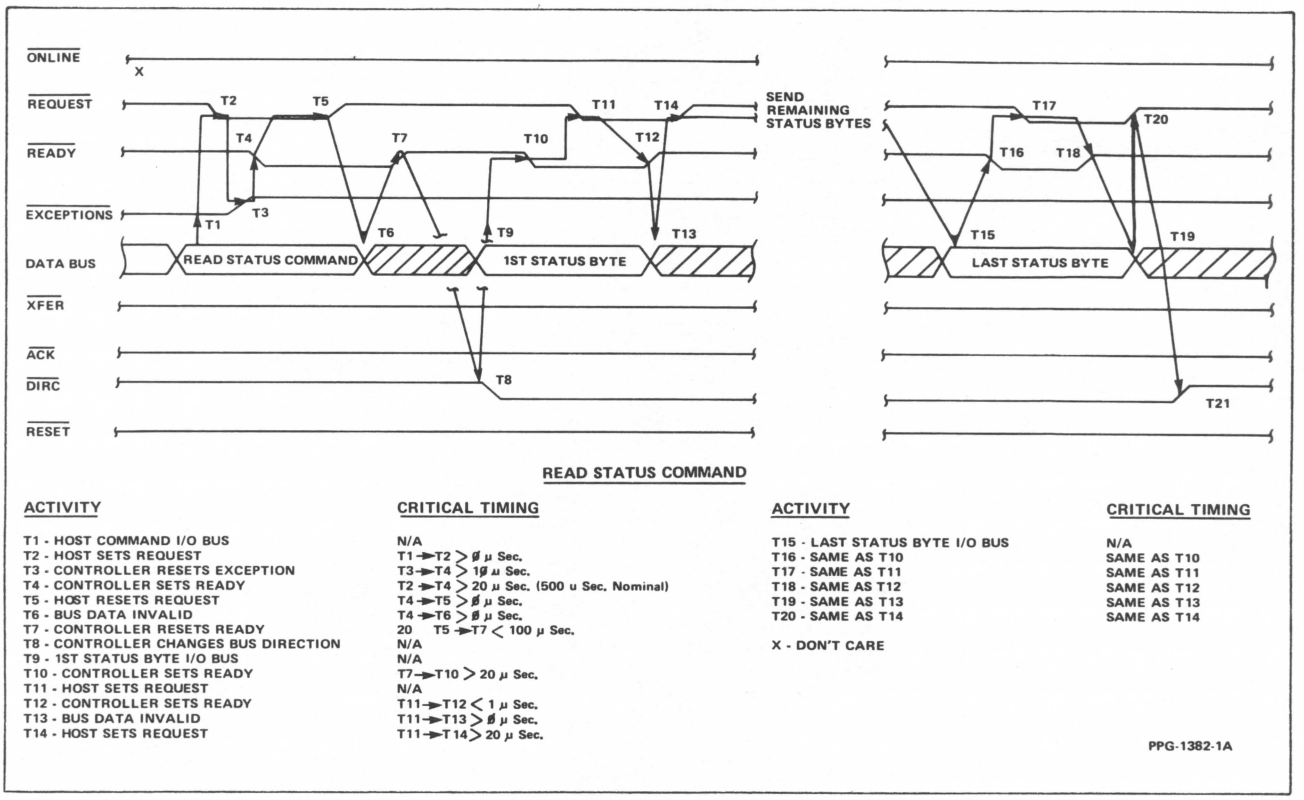

Figure 4-8. READ STATUS Command Timing Diagram

SELECT COMMAND TIMING

Figure 4-9 illustrates timing for the SELECT command sequence. Note that the command sequence generates an exception condition if other than 0 is selected for the tape cartridge drive.

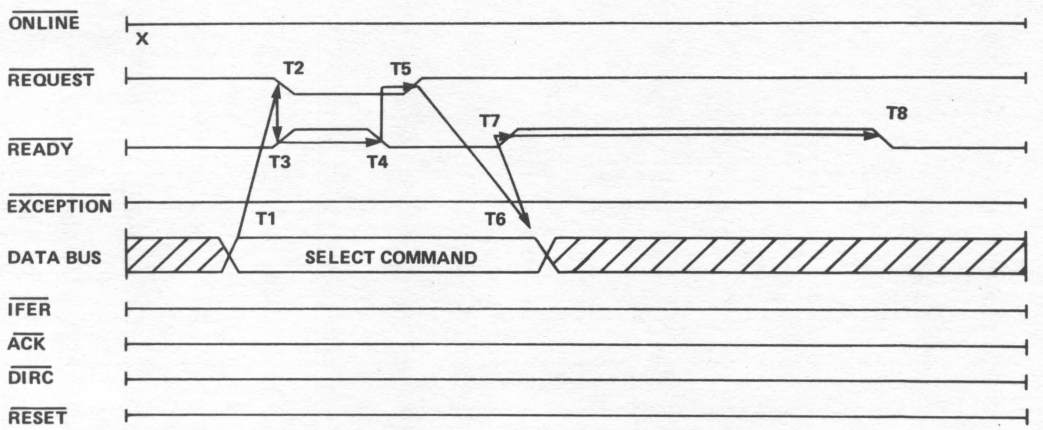

SELECT COMMAND

ACTIVITY	CRITICAL TIMING
T1 - HOST COMMAND TO BUS	N/A
T2 - HOST SETS REQUEST	T1→T2 > 1 μ Sec.
T3 - CONTROLLER RESETS READY	T2→T3 < 1 μ Sec.
T4 - CONTROLLER SETS READY	T3→T1 > 50 μ Sec. (500 μ Sec. Nominal)
T5 - HOST RESETS REQUEST	T4→T5 > 0 μ Sec.
T6 - BUS DATA INVALID	T4→T6 > 0 μ Sec.
T7 - CONTROLLER RESETS READY	20 < T5→T7 < 100 μ Sec.
T8 - CONTROLLER SETS READY	T7→T8 > 20 μ Sec.
X - DON'T CARE	

PPG-1383-1A

Figure 4-9. SELECT Command Timing Diagram

POSITION COMMAND TIMING

Figure 4-10 illustrates POSITION command timing for the REWIND, RE-TENSION, and ERASE commands.

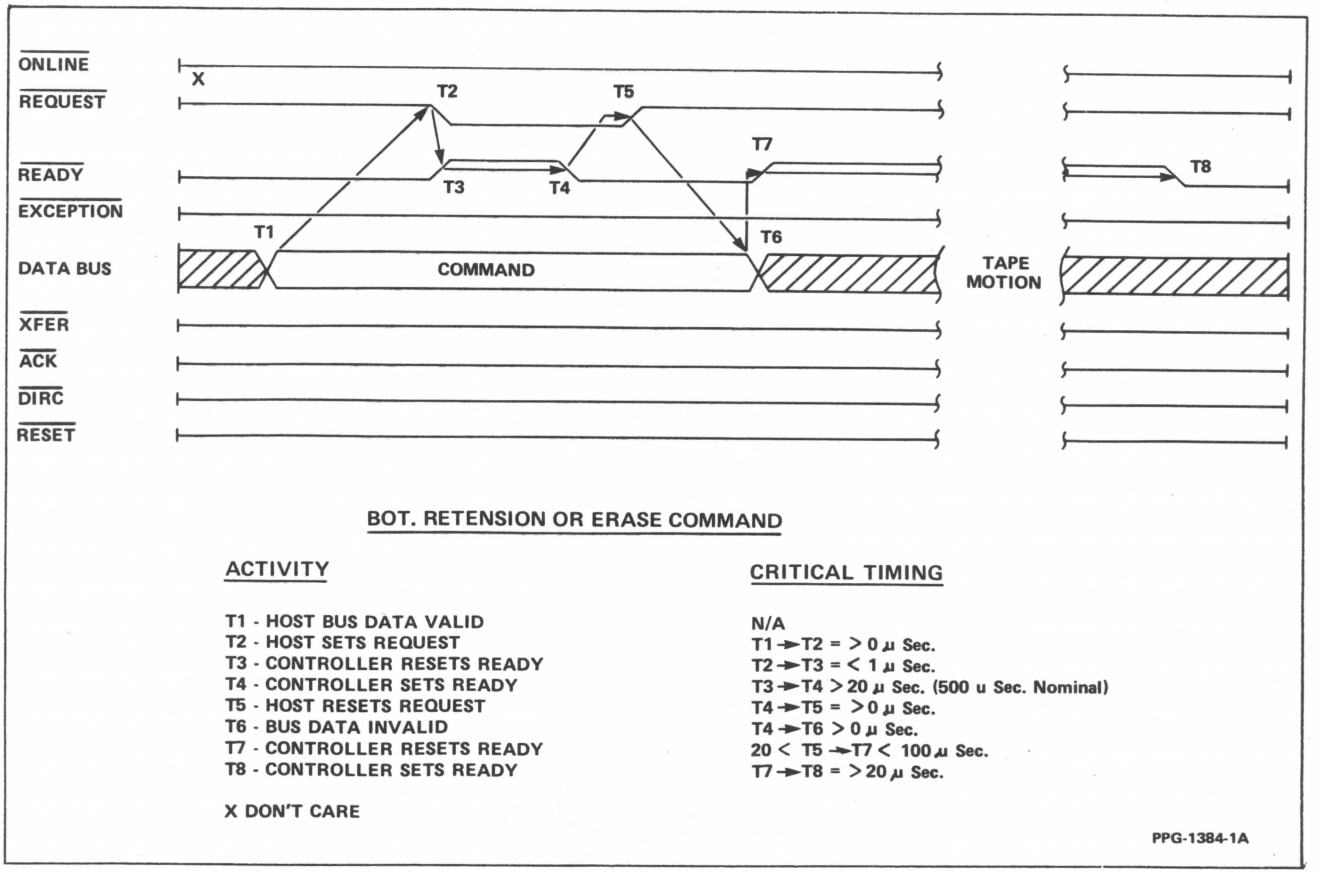

Figure 4-10. POSITION Command Timing Diagram

WRITE DATA COMMAND TIMING

Figure 4-11 illustrates WRITE DATA command timing. The WRITE DATA command records user data on the cartridge tape media.

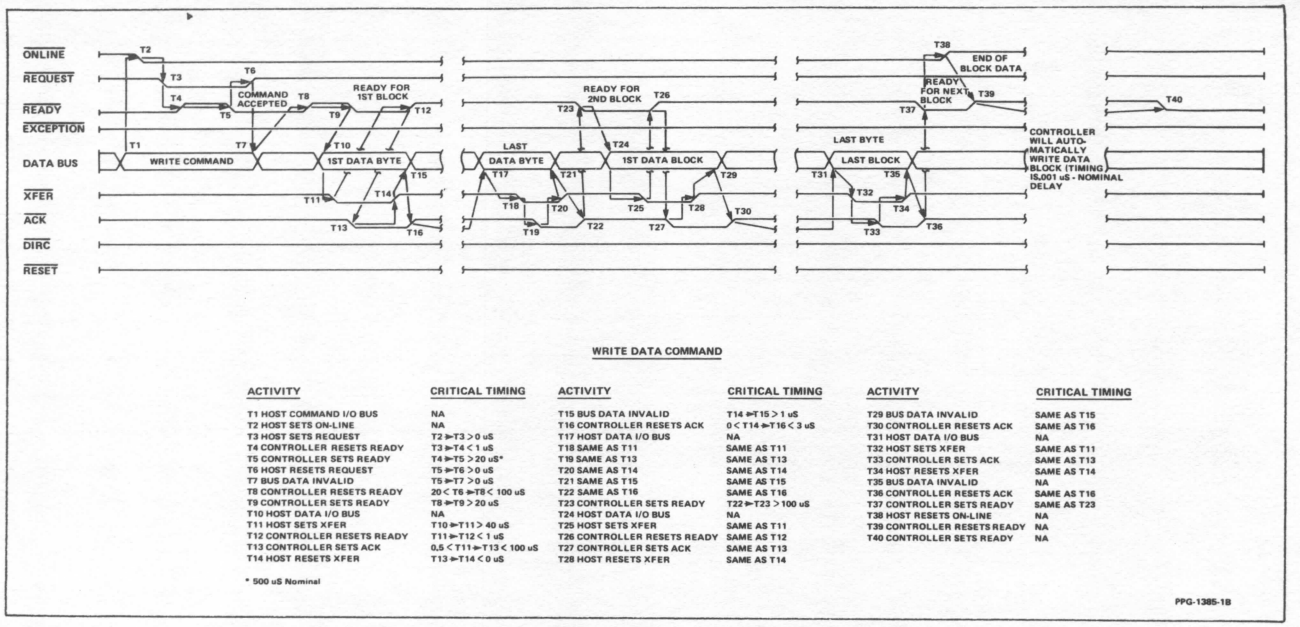

WRITE DATA COMMAND

ACTIVITY	CRITICAL TIMING	ACTIVITY	CRITICAL TIMING	ACTIVITY	CRITICAL TIMING
T1 HOST COMMAND I/O BUS	NA	T15 BUS DATA INVALID	T14 ⇻T15 > 1 uS	T29 BUS DATA INVALID	SAME AS T15
T2 HOST SETS ON-LINE	NA	T16 CONTROLLER RESETS ACK	0 < T14 ⇻T16 < 3 uS	T30 CONTROLLER RESETS ACK	SAME AS T16
T3 HOST SETS REQUEST	T2 ⇻T3 > 0 uS	T17 HOST DATA I/O BUS	NA	T31 HOST DATA I/O BUS	NA
T4 CONTROLLER RESETS READY	T3 ⇻T4 < 1 uS	T18 SAME AS T11	SAME AS T11	T32 HOST SETS XFER	SAME AS T11
T5 CONTROLLER SETS READY	T4 ⇻T5 > 20 uS*	T19 SAME AS T13	SAME AS T13	T33 CONTROLLER SETS ACK	SAME AS T13
T6 HOST RESETS REQUEST	T5 ⇻T6 > 0 uS	T20 SAME AS T14	SAME AS T14	T34 HOST RESETS XFER	SAME AS T14
T7 BUS DATA INVALID	T5 ⇻T7 > 0 uS	T21 SAME AS T15	SAME AS T15	T35 BUS DATA INVALID	NA
T8 CONTROLLER RESETS READY	20 < T6 ⇻T8 < 100 uS	T22 SAME AS T16	SAME AS T16	T36 CONTROLLER RESETS ACK	SAME AS T16
T9 CONTROLLER SETS READY	T8 ⇻T9 > 20 uS	T23 CONTROLLER SETS READY	T22 ⇻T23 > 100 uS	T37 CONTROLLER SETS READY	SAME AS T23
T10 HOST DATA I/O BUS	NA	T24 HOST DATA I/O BUS	NA	T38 HOST RESETS ON-LINE	NA
T11 HOST SETS XFER	T10 ⇻T11 > 40 uS	T25 HOST SETS XFER	SAME AS T11	T39 CONTROLLER RESETS READY	NA
T12 CONTROLLER RESETS READY	T11 ⇻T12 < 1 uS	T26 CONTROLLER RESETS READY	SAME AS T12	T40 CONTROLLER SETS READY	NA
T13 CONTROLLER SETS ACK	0.5 < T11 ⇻T13 < 100 uS	T27 CONTROLLER SETS ACK	SAME AS T13		
T14 HOST RESETS XFER	T13 ⇻T14 < 0 uS	T28 HOST RESETS XFER	SAME AS T14		

* 500 uS Nominal

PPG-1385-1B

Figure 4-11. WRITE DATA Command Timing Diagram

READ DATA COMMAND TIMING

Figure 4-12 illustrates READ DATA command timing. The READ DATA command reads (restores) user data from the cartridge tape media.

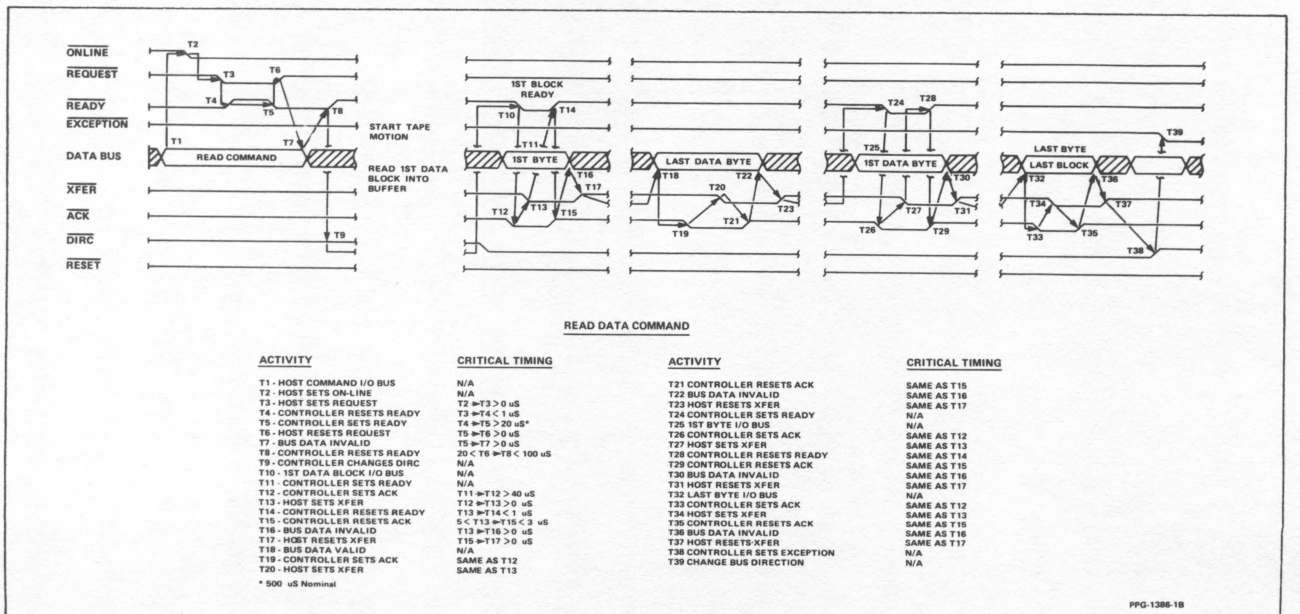

READ DATA COMMAND

ACTIVITY	CRITICAL TIMING	ACTIVITY	CRITICAL TIMING
T1 - HOST COMMAND I/O BUS	N/A	T21 CONTROLLER RESETS ACK	SAME AS T15
T2 - HOST SETS ON-LINE	N/A	T22 BUS DATA INVALID	SAME AS T16
T3 - HOST SETS REQUEST	T2 ⇻T3 > 0 uS	T23 HOST RESETS XFER	SAME AS T17
T4 - CONTROLLER RESETS READY	T3 ⇻T4 < 1 uS	T24 CONTROLLER SETS READY	N/A
T5 - CONTROLLER SETS READY	T4 ⇻T5 > 20 uS*	T25 1ST BYTE I/O BUS	N/A
T6 - HOST RESETS REQUEST	T5 ⇻T6 > 0 uS	T26 CONTROLLER SETS ACK	SAME AS T12
T7 - BUS DATA INVALID	T5 ⇻T7 > 0 uS	T27 HOST SETS XFER	SAME AS T13
T8 - CONTROLLER RESETS READY	20 < T6 ⇻T8 < 100 uS	T28 CONTROLLER RESETS READY	SAME AS T14
T9 - CONTROLLER CHANGES DIRC	N/A	T29 CONTROLLER RESETS ACK	SAME AS T15
T10 - 1ST DATA BLOCK I/O BUS	N/A	T30 BUS DATA INVALID	SAME AS T16
T11 - CONTROLLER SETS READY	N/A	T31 HOST RESETS XFER	SAME AS T17
T12 - CONTROLLER SETS ACK	T11 ⇻T12 > 40 uS	T32 LAST BYTE I/O BUS	N/A
T13 - HOST SETS XFER	T12 ⇻T13 > 0 uS	T33 CONTROLLER SETS ACK	SAME AS T12
T14 - CONTROLLER RESETS READY	T13 ⇻T14 < 1 uS	T34 HOST SETS XFER	SAME AS T13
T15 - CONTROLLER RESETS ACK	5 < T13 ⇻T15 < 3 uS	T35 CONTROLLER RESETS ACK	SAME AS T15
T16 - BUS DATA INVALID	T13 ⇻T16 > 0 uS	T36 BUS DATA INVALID	SAME AS T16
T17 - HOST RESETS XFER	T15 ⇻T17 > 0 uS	T37 HOST RESETS XFER	SAME AS T17
T18 - BUS DATA VALID	N/A	T38 CONTROLLER SETS EXCEPTION	N/A
T19 - CONTROLLER SETS ACK	SAME AS T12	T39 CHANGE BUS DIRECTION	N/A
T20 - HOST SETS XFER	SAME AS T13		

* 500 uS Nominal

PPG-1386-1B

Figure 4-12. READ DATA Command Timing Diagram

WRITE FILE MARK COMMAND TIMING

Figure 4-13 illustrates WRITE FILE MARK command timing. The WRITE FILE MARK command separates logical and/or physical records on the tape.

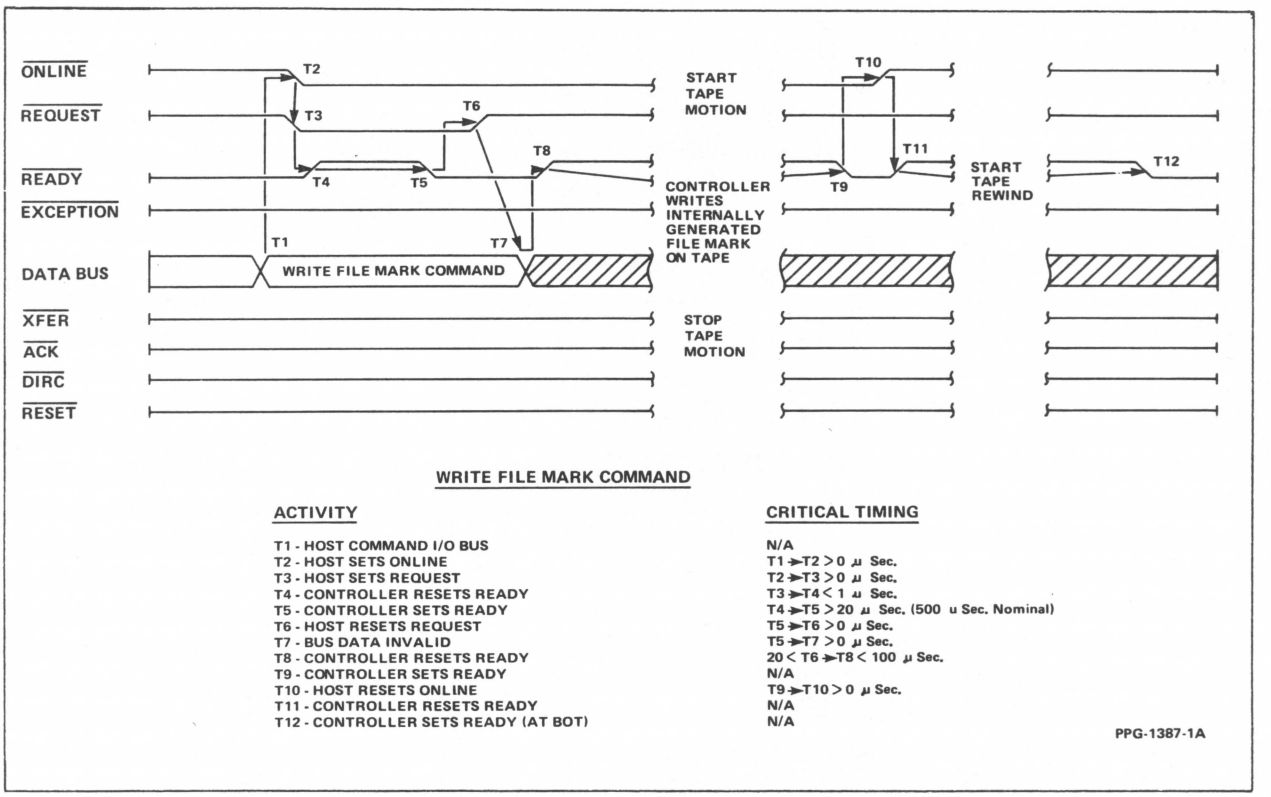

Figure 4-13. WRITE FILE MARK Command Timing Diagram

READ FILE MARK COMMAND TIMING

Figure 4-14 illustrates READ FILE MARK command timing. The READ FILE MARK command positions the tape at a file mark.

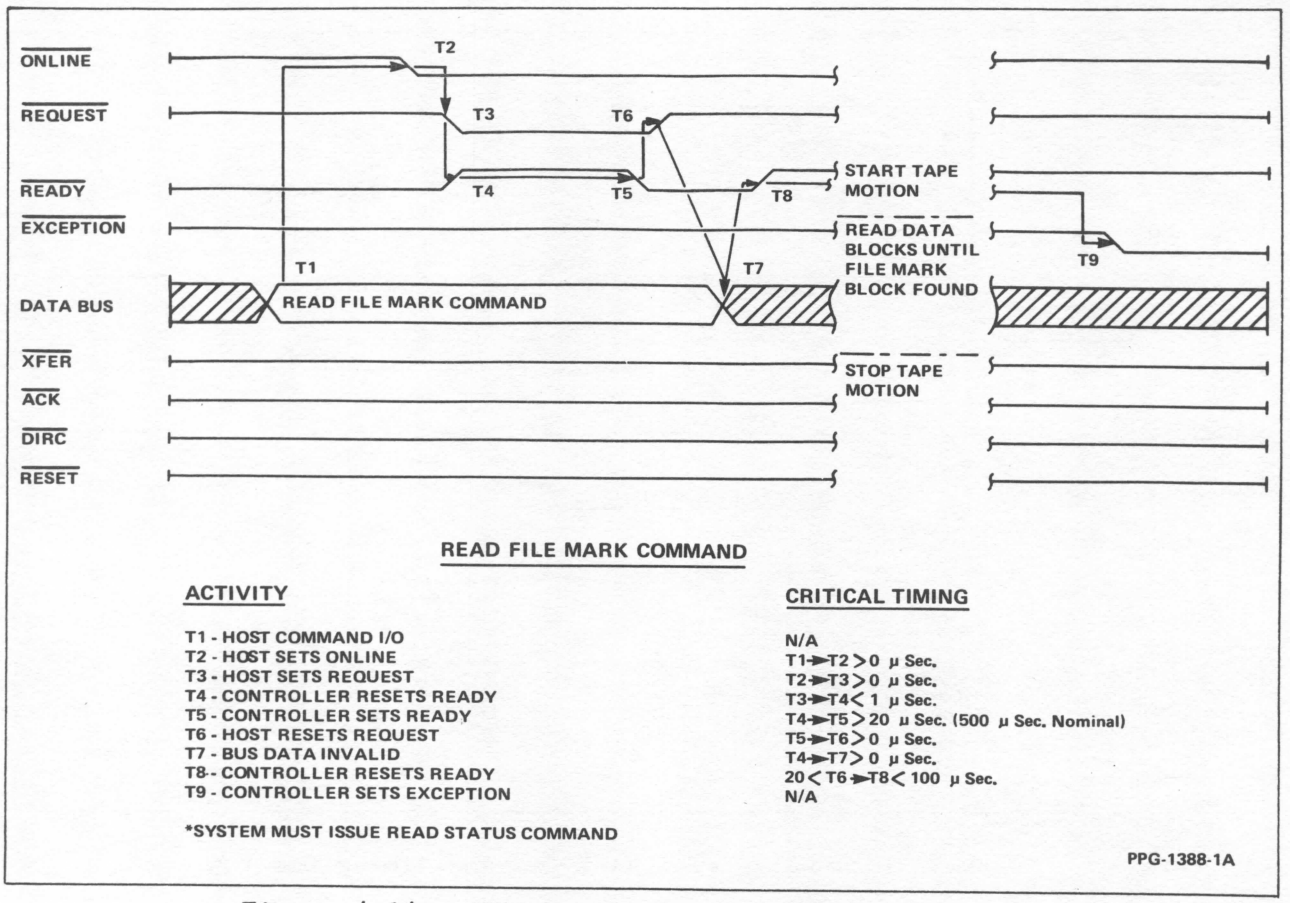

Figure 4-14. READ FILE MARK Command Timing Diagram

TAPE CARTRIDGE TRACKS

The following paragraphs provide information on the number and use of tracks, the reference plane, and the track center line.

NUMBER AND USE OF TRACKS

The tape cartridge drive supports nine tracks that are numbered 0 through 8. The drive records even-numbered tracks serially in the forward direction of tape movement and odd-numbered tracks serially in the reverse direction of tape movement. On even tracks, the drive records all data for interchange after the load point marker and before the end-of-tape marker. On tracks 3 and 5, the drive records all data for interchange after the early warning marker and before the beginning-of-tape marker. On tracks 1 and 7, the drive records all data for interchange between the early warning marker and the load point marker. Note that tracks are recorded sequentially in the following order:

0, 1, 2, ..., 8

REFERENCE PLANE

The reference plane of the magnetic tape cartridge base is the datum for track location.

TRACK CENTER LINE LOCATIONS

Figure 4-15 shows the location of the track center lines.

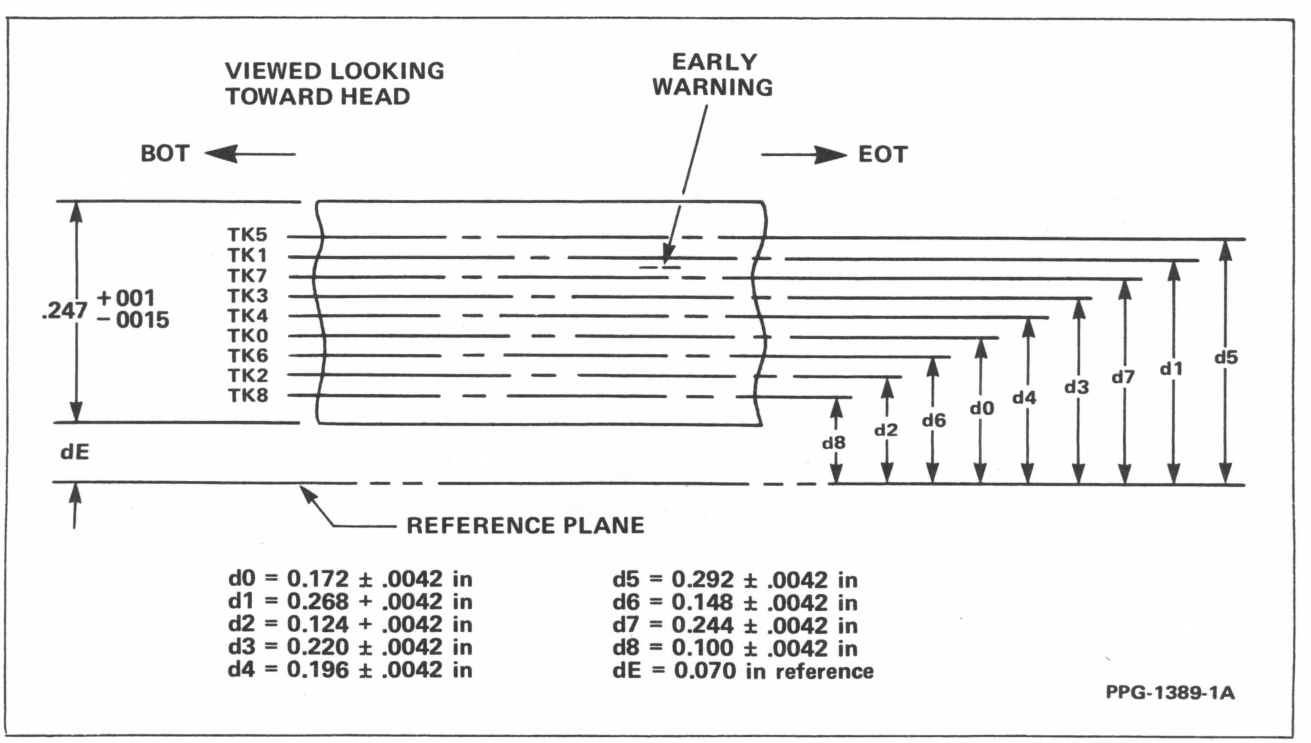

Figure 4-15. Track Center Line Locations

DIAGRAMS 5

This section provides the schematic diagram for the streaming tape.

REVISION RECORD

17	16	15	14	13	12	11	10	9	8	7	6	5	4	3	2	1							
01	01	01	01	01	01	01	01	01	01	01	01	01	01	01	01	01	01	[illegible]	RELEASE CLASS B	HB	8-31-84	CEW	[illegible]
01	02	01	02	02	01	02	01	01	01	01	01	01	01	01	02	02	02	3266	SEE ECO	HB	[illegible]	[illegible]	[illegible]
01	02	01	03	02	01	02	01	01	01	01	01	01	01	01	02	03	03	3284	SEE ECO	HB	11/5/84	[illegible]	[illegible]
A	A	A	A	A	A	A	A	A	A	A	A	A	A	A	A	A	A	[illegible]	RELEASE CLASS A	HB	[illegible]	[illegible]	[illegible]

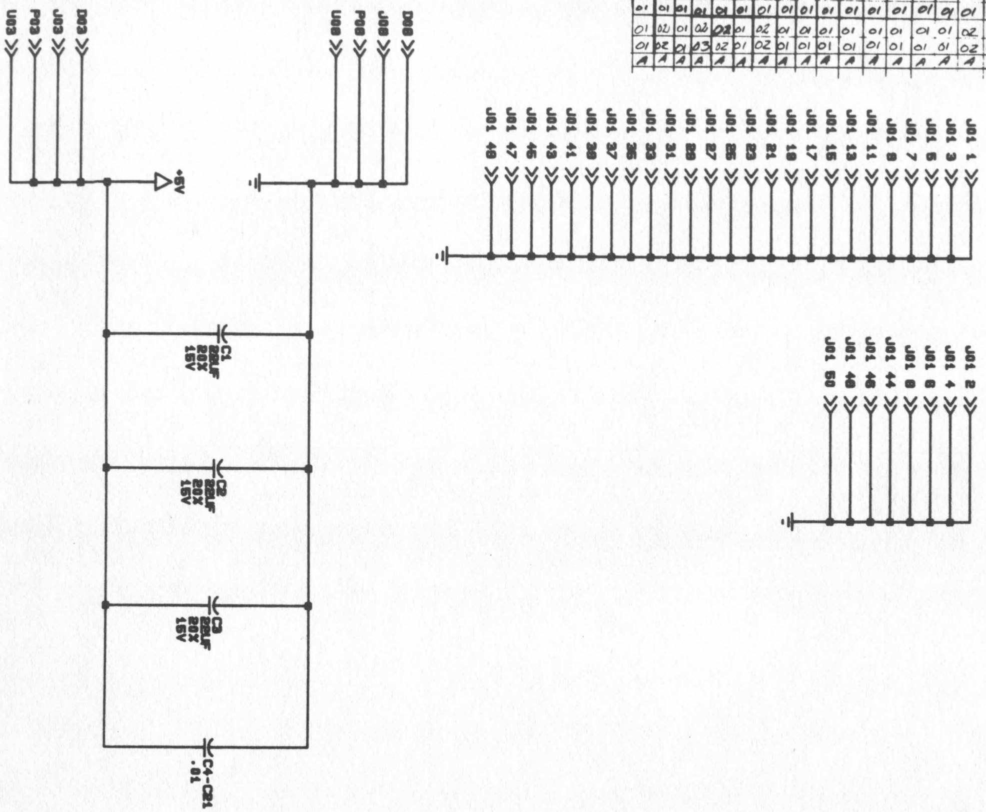

NOTES:

1. UNLESS OTHERWISE SPECIFIED POWER AND GROUND PINS OF INTEGRATED CIRCUITS ARE AS LISTED BELOW.

14 PIN INTEGRATED CKTS. PIN 14- +5V, PIN 7- GND
16 PIN INTEGRATED CKTS. PIN 16- +5V, PIN 7- GND
18 PIN INTEGRATED CKTS. PIN 18- +5V, PIN 9- GND
24 PIN INTEGRATED CKTS. PIN 24- +5V, PIN 12- GND

CONTROL DATA CORPORATION		TITLE: SCHEMATIC DIAGRAM STREAMING TAPE
FIRST USED ON		
DWN	[illegible] HALF	8-23-84
CHKD	C. A. Keller	8-[illegible]
ENGR	[illegible] Thomas	8-[illegible]
MFG	[illegible]	11-16-84
APPR	[illegible]	[illegible]

UPDATE MADE 7/20/84	CODE ID 52910	C	DWG NO 22205769
SCALE NONE	CROSS REF NO		SHEET 1 OF 17

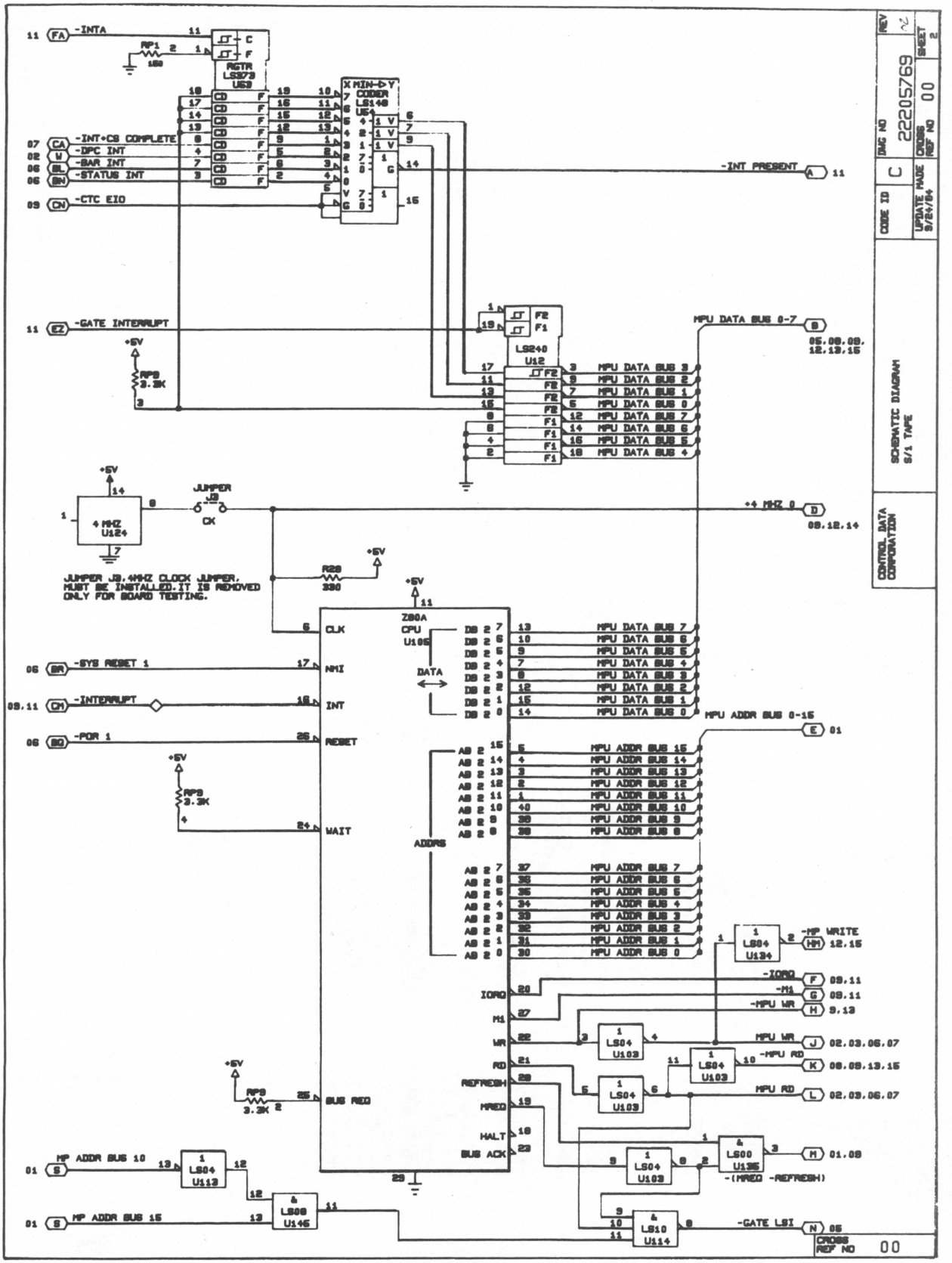
-INTA
-INT+CS COMPLETE
-DPC INT
-BAR INT
-STATUS INT
-CTC EIO
-INT PRESENT
-GATE INTERRUPT
MPU DATA BUS 0-7
+5V
4 MHZ U124
JUMPER J9
CK
+4 MHZ
JUMPER J9.4MHZ CLOCK JUMPER, MUST BE INSTALLED.IT IS REMOVED ONLY FOR BOARD TESTING.
Z80A CPU U105
CLK
NMI
INT
RESET
WAIT
BUS REQ
BUS ACK
HALT
MREQ
IORQ
M1
WR
RD
REFRESH
DATA
ADDRS
-SYS RESET 1
-INTERRUPT
-POR 1
MPU ADDR BUS 0-15
-MP WRITE
-IORQ
-M1
-MPU WR
MPU WR
-MPU RD
MPU RD
MP ADDR BUS 10
MP ADDR BUS 15
-(MREQ -REFRESH)
-GATE LSI
CONTROL DATA CORPORATION
SCHEMATIC DIAGRAM S/1 TAPE
CODE ID C
DWG NO 22205769
REV N
SHEET 2
CROSS REF NO 00

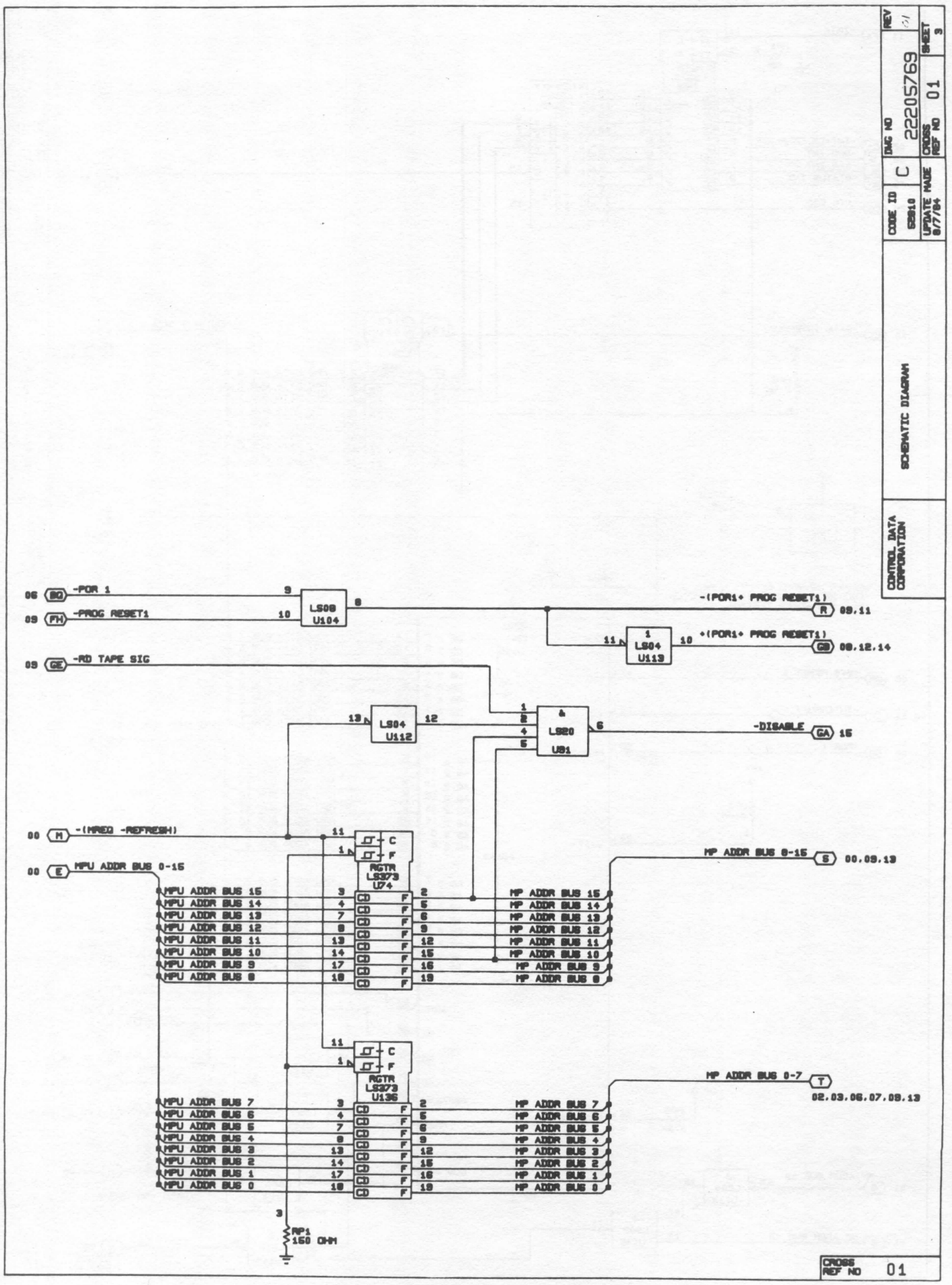
CONTROL DATA CORPORATION
SCHEMATIC DIAGRAM
CODE ID 62810
C
DWG NO 22205769
REV 01
SHEET 3
UPDATE MADE 8/7/84
CROSS REF NO 01
-POR 1
-PROG RESET1
LS08 U104
-(POR1+ PROG RESET1)
LS04 U113
+(POR1+ PROG RESET1)
-RD TAPE SIG
LS04 U112
LS20 U81
-DISABLE
-(MREQ -REFRESH)
MPU ADDR BUS 0-15
RGTR LS373 U74
MP ADDR BUS 0-15
RGTR LS373 U136
MP ADDR BUS 0-7
RP1 150 OHM
CROSS REF NO 01

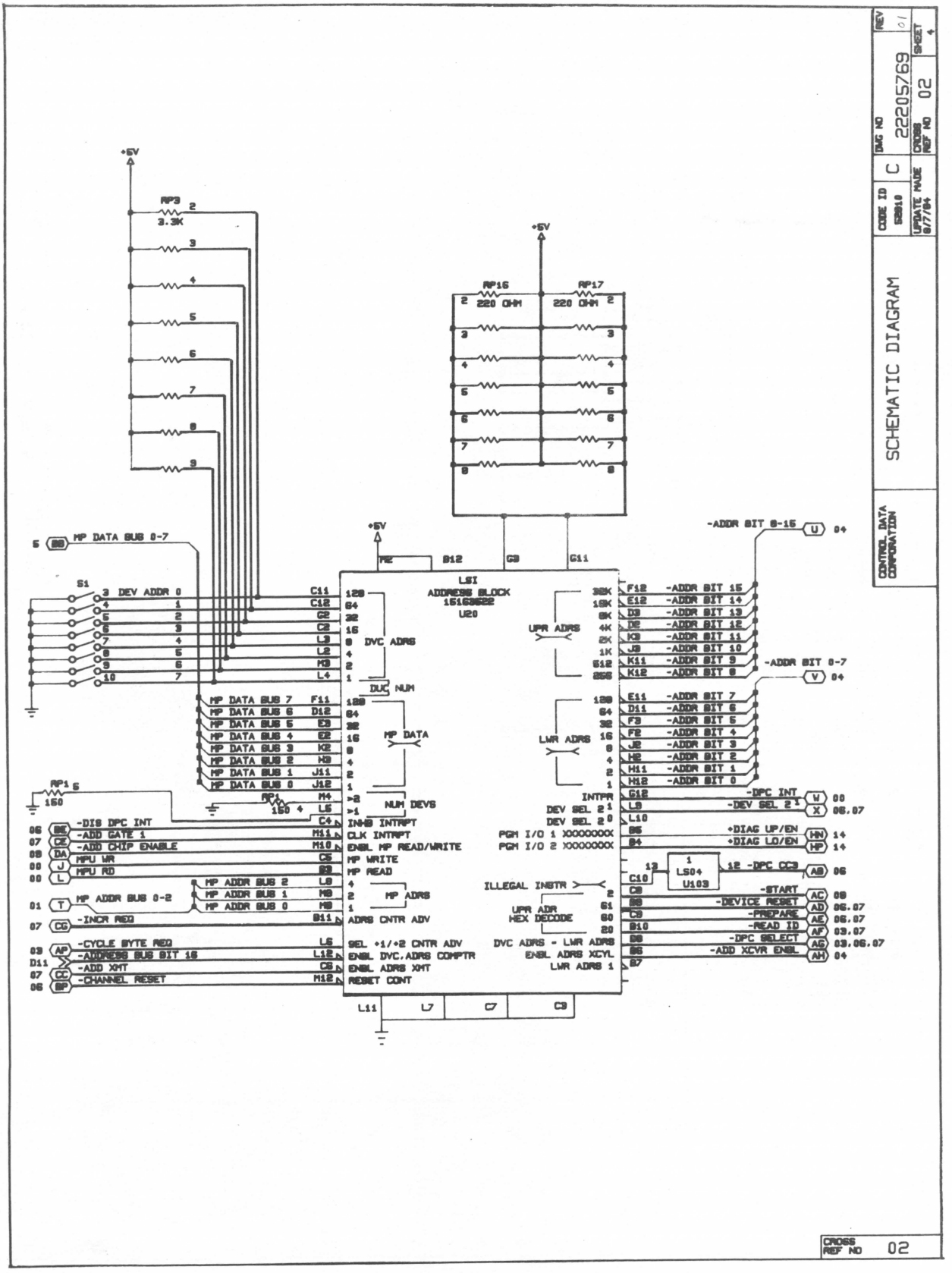
SCHEMATIC DIAGRAM
CONTROL DATA CORPORATION
DWG NO 22205769
REV 01
SHEET 4
ORDER REF NO 02
CODE ID 53510
C
UPDATE MADE 8/7/84
CROSS REF NO 02
+5V
RP3
3.3K
RP16
220 OHM
RP17
220 OHM
LSI
ADDRESS BLOCK
15163622
U20
DVC ADRS
DUC NUM
MP DATA
NUM DEVS
INHB INTRPT
CLK INTRPT
ENBL MP READ/WRITE
MP WRITE
MP READ
MP ADRS
ADRS CNTR ADV
SEL +1/+2 CNTR ADV
ENBL DVC.ADRS COMPTR
ENBL ADRS XMT
RESET CONT
UPR ADRS
LWR ADRS
INTPR
DEV SEL 2 1
DEV SEL 2 0
PGM I/O 1 XXXXXXXX
PGM I/O 2 XXXXXXXX
ILLEGAL INSTR
UPR ADR HEX DECODE
DVC ADRS - LWR ADRS
ENBL ADRS XCYL
LWR ADRS 1
MP DATA BUS 0-7
S1
DEV ADDR 0
MP DATA BUS 7
MP DATA BUS 6
MP DATA BUS 5
MP DATA BUS 4
MP DATA BUS 3
MP DATA BUS 2
MP DATA BUS 1
MP DATA BUS 0
RP1
150
-DIS DPC INT
-ADD GATE 1
-ADD CHIP ENABLE
MPU WR
MPU RD
MP ADDR BUS 0-2
MP ADDR BUS 2
MP ADDR BUS 1
MP ADDR BUS 0
-INCR REQ
-CYCLE BYTE REQ
-ADDRESS BUS BIT 16
-ADD XMT
-CHANNEL RESET
-ADDR BIT 0-15
-ADDR BIT 15
-ADDR BIT 14
-ADDR BIT 13
-ADDR BIT 12
-ADDR BIT 11
-ADDR BIT 10
-ADDR BIT 9
-ADDR BIT 8
-ADDR BIT 0-7
-ADDR BIT 7
-ADDR BIT 6
-ADDR BIT 5
-ADDR BIT 4
-ADDR BIT 3
-ADDR BIT 2
-ADDR BIT 1
-ADDR BIT 0
-DPC INT
-DEV SEL 2 1
+DIAG UP/EN
+DIAG LO/EN
LS04
U103
-DPC CC3
-START
-DEVICE RESET
-PREPARE
-READ ID
-DPC SELECT
-ADD XCVR ENBL

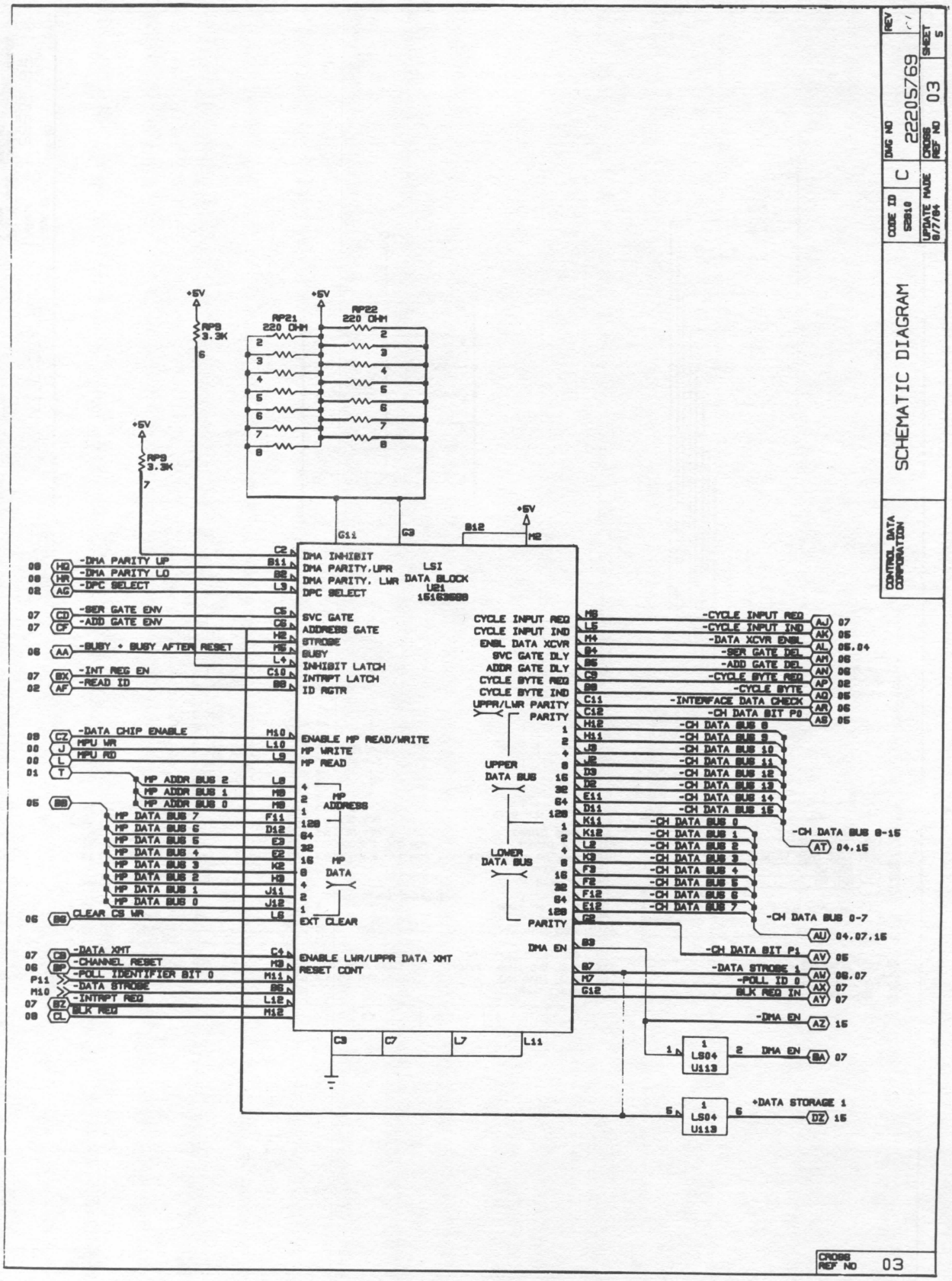
SCHEMATIC DIAGRAM
CONTROL DATA CORPORATION
DWG NO 22205769
REV C
SHEET 5
CROSS REF NO 03
CODE ID 52810
UPDATE MADE 8/7/84
+5V
RP9 3.3K
RP21 220 OHM
RP22 220 OHM
LSI DATA BLOCK U21 15163688
DMA INHIBIT
DMA PARITY,UPR
DMA PARITY, LWR
DPC SELECT
SVC GATE
ADDRESS GATE
STROBE
BUSY
INHIBIT LATCH
INTRPT LATCH
ID RGTR
ENABLE MP READ/WRITE
MP WRITE
MP READ
MP ADDRESS
MP DATA
EXT CLEAR
ENABLE LWR/UPPR DATA XMT
RESET CONT
CYCLE INPUT REQ
CYCLE INPUT IND
ENBL DATA XCVR
SVC GATE DLY
ADDR GATE DLY
CYCLE BYTE REQ
CYCLE BYTE IND
UPPR/LWR PARITY
PARITY
UPPER DATA BUS
LOWER DATA BUS
DMA EN
-DMA PARITY UP
-DMA PARITY LO
-DPC SELECT
-SER GATE ENV
-ADD GATE ENV
-BUSY + BUSY AFTER RESET
-INT REQ EN
-READ ID
-DATA CHIP ENABLE
MPU WR
MPU RD
MP ADDR BUS 2
MP ADDR BUS 1
MP ADDR BUS 0
MP DATA BUS 7
MP DATA BUS 6
MP DATA BUS 5
MP DATA BUS 4
MP DATA BUS 3
MP DATA BUS 2
MP DATA BUS 1
MP DATA BUS 0
CLEAR CS WR
-DATA XMT
-CHANNEL RESET
-POLL IDENTIFIER BIT 0
-DATA STROBE
-INTRPT REQ
BLK REQ
-CYCLE INPUT REQ
-CYCLE INPUT IND
-DATA XCVR ENBL
-SER GATE DEL
-ADD GATE DEL
-CYCLE BYTE REQ
-CYCLE BYTE
-INTERFACE DATA CHECK
-CH DATA BIT P0
-CH DATA BUS 0
-CH DATA BUS 1
-CH DATA BUS 2
-CH DATA BUS 3
-CH DATA BUS 4
-CH DATA BUS 5
-CH DATA BUS 6
-CH DATA BUS 7
-CH DATA BUS 8
-CH DATA BUS 9
-CH DATA BUS 10
-CH DATA BUS 11
-CH DATA BUS 12
-CH DATA BUS 13
-CH DATA BUS 14
-CH DATA BUS 15
-CH DATA BUS 0-15
-CH DATA BUS 0-7
-CH DATA BIT P1
-DATA STROBE 1
-POLL ID 0
BLK REQ IN
-DMA EN
DMA EN
+DATA STORAGE 1
LS04 U113
CROSS REF NO 03

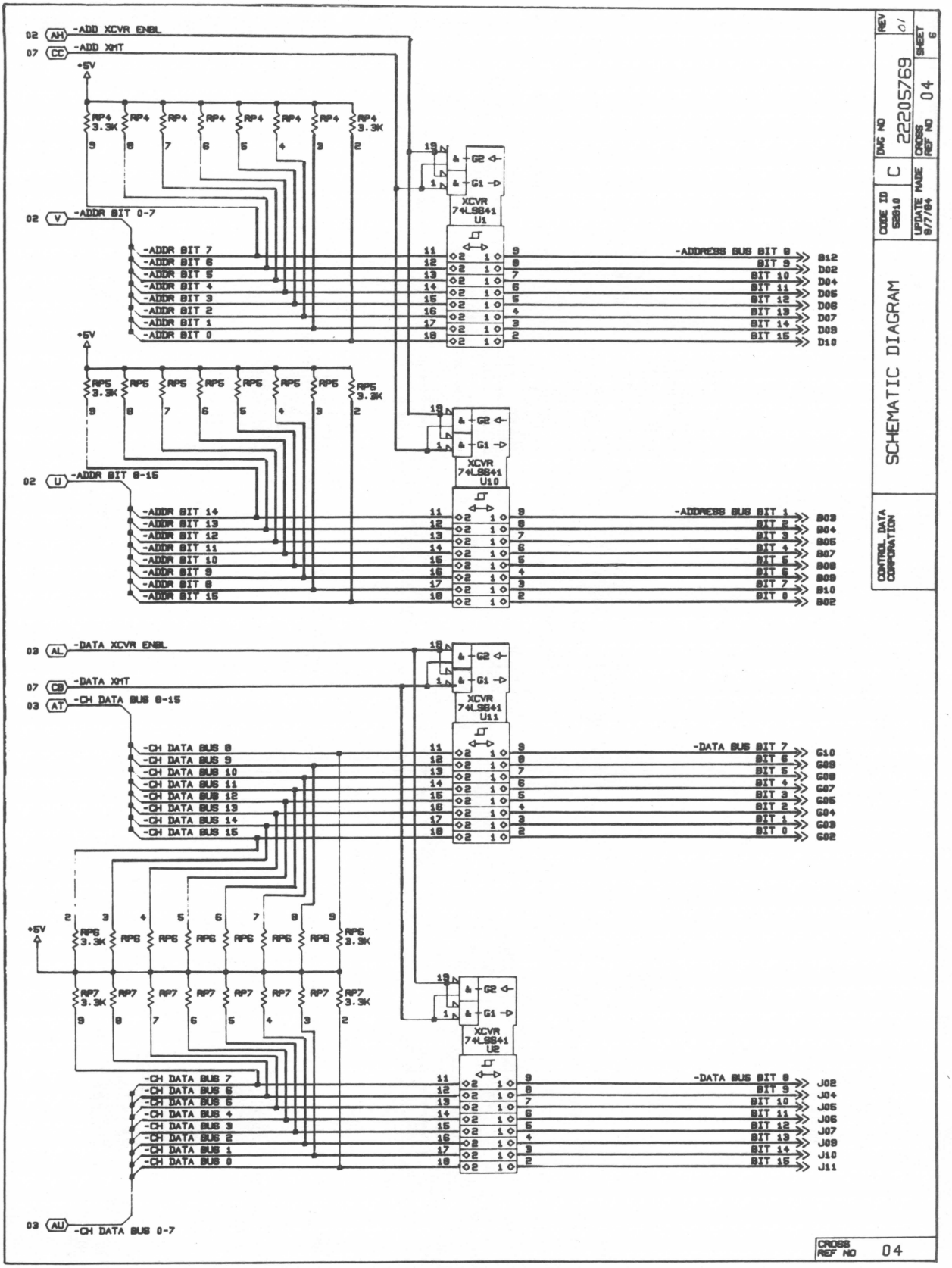
02 AH -ADD XCVR ENBL
07 CC -ADD XMT
+5V
RP4 3.3K
02 V -ADDR BIT 0-7
-ADDR BIT 7
-ADDR BIT 6
-ADDR BIT 5
-ADDR BIT 4
-ADDR BIT 3
-ADDR BIT 2
-ADDR BIT 1
-ADDR BIT 0
XCVR 74LS641 U1
-ADDRESS BUS BIT 8
BIT 9
BIT 10
BIT 11
BIT 12
BIT 13
BIT 14
BIT 15
RP5 3.3K
02 U -ADDR BIT 8-15
-ADDR BIT 14
-ADDR BIT 13
-ADDR BIT 12
-ADDR BIT 11
-ADDR BIT 10
-ADDR BIT 9
-ADDR BIT 8
-ADDR BIT 15
XCVR 74LS641 U10
-ADDRESS BUS BIT 1
BIT 2
BIT 3
BIT 4
BIT 5
BIT 6
BIT 7
BIT 0
03 AL -DATA XCVR ENBL
07 CB -DATA XMT
03 AT -CH DATA BUS 8-15
-CH DATA BUS 8
-CH DATA BUS 9
-CH DATA BUS 10
-CH DATA BUS 11
-CH DATA BUS 12
-CH DATA BUS 13
-CH DATA BUS 14
-CH DATA BUS 15
XCVR 74LS641 U11
-DATA BUS BIT 7
BIT 6
BIT 5
BIT 4
BIT 3
BIT 2
BIT 1
BIT 0
RP6 3.3K
RP7 3.3K
-CH DATA BUS 7
-CH DATA BUS 6
-CH DATA BUS 5
-CH DATA BUS 4
-CH DATA BUS 3
-CH DATA BUS 2
-CH DATA BUS 1
-CH DATA BUS 0
XCVR 74LS641 U2
-DATA BUS BIT 8
BIT 9
BIT 10
BIT 11
BIT 12
BIT 13
BIT 14
BIT 15
03 AU -CH DATA BUS 0-7
REV 01
DWG NO 22205769
SHEET 6
CODE ID 52810
C
CROSS REF NO 04
UPDATE MADE 8/7/84
SCHEMATIC DIAGRAM
CONTROL DATA CORPORATION
CROSS REF NO 04

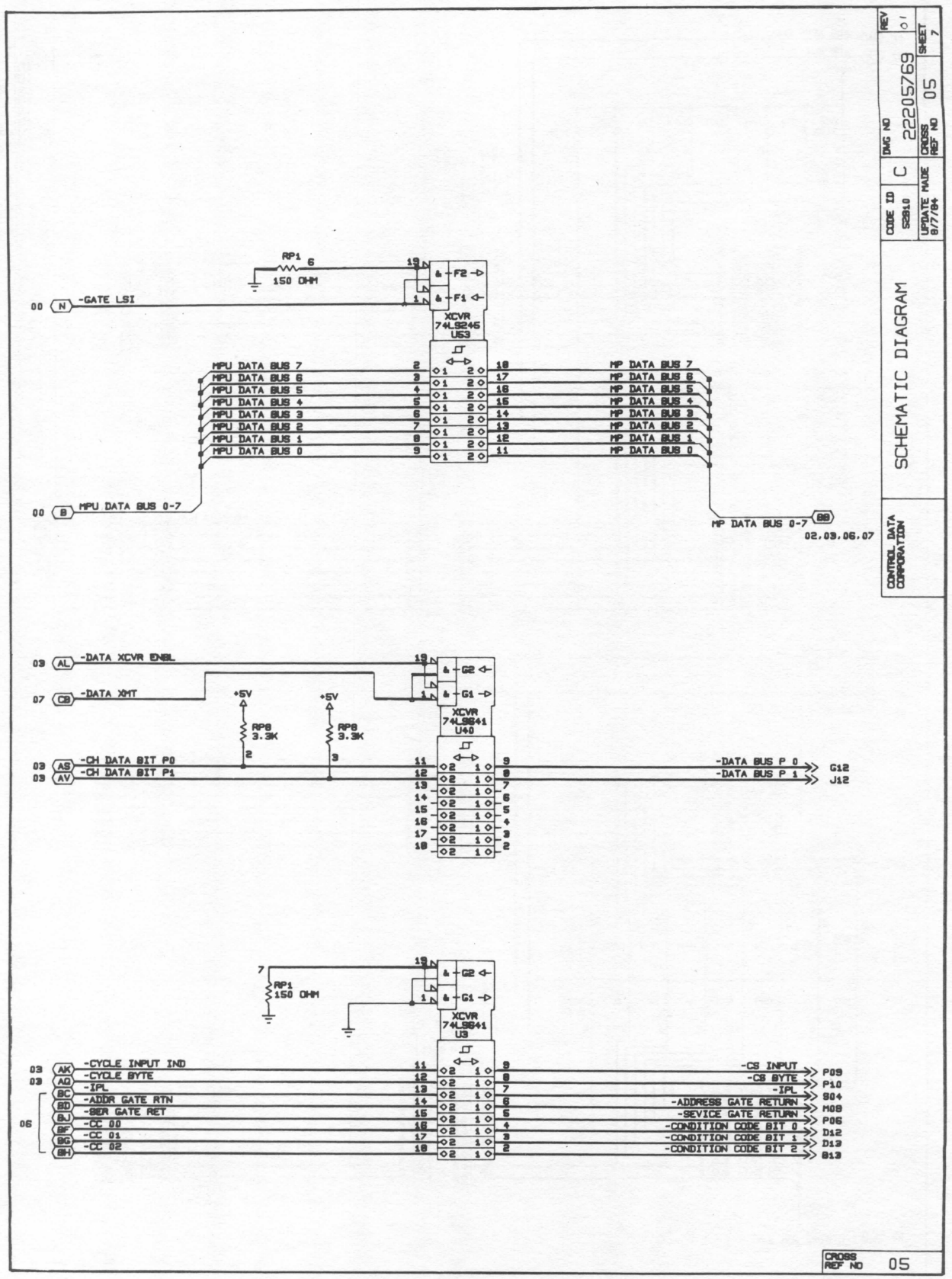
SCHEMATIC DIAGRAM
CONTROL DATA CORPORATION
DWG NO 22205769
REV 01
SHEET 7
CODE ID 52810
C
UPDATE MADE 8/7/84
CROSS REF NO 05
RP1 6
150 OHM
-GATE LSI
XCVR 74LS245 U53
MPU DATA BUS 7
MPU DATA BUS 6
MPU DATA BUS 5
MPU DATA BUS 4
MPU DATA BUS 3
MPU DATA BUS 2
MPU DATA BUS 1
MPU DATA BUS 0
MP DATA BUS 7
MP DATA BUS 6
MP DATA BUS 5
MP DATA BUS 4
MP DATA BUS 3
MP DATA BUS 2
MP DATA BUS 1
MP DATA BUS 0
MPU DATA BUS 0-7
MP DATA BUS 0-7
02,03,06,07
-DATA XCVR ENBL
-DATA XMT
+5V
RP8 3.3K
XCVR 74LS641 U40
-CH DATA BIT P0
-CH DATA BIT P1
-DATA BUS P 0
-DATA BUS P 1
G12
J12
RP1 150 OHM
XCVR 74LS641 U3
-CYCLE INPUT IND
-CYCLE BYTE
-IPL
-ADDR GATE RTN
-SEVICE GATE RET
-CC 00
-CC 01
-CC 02
-CS INPUT
-CS BYTE
-IPL
-ADDRESS GATE RETURN
-SEVICE GATE RETURN
-CONDITION CODE BIT 0
-CONDITION CODE BIT 1
-CONDITION CODE BIT 2
P09
P10
S04
M09
P06
D12
D13
B13
CROSS REF NO 05

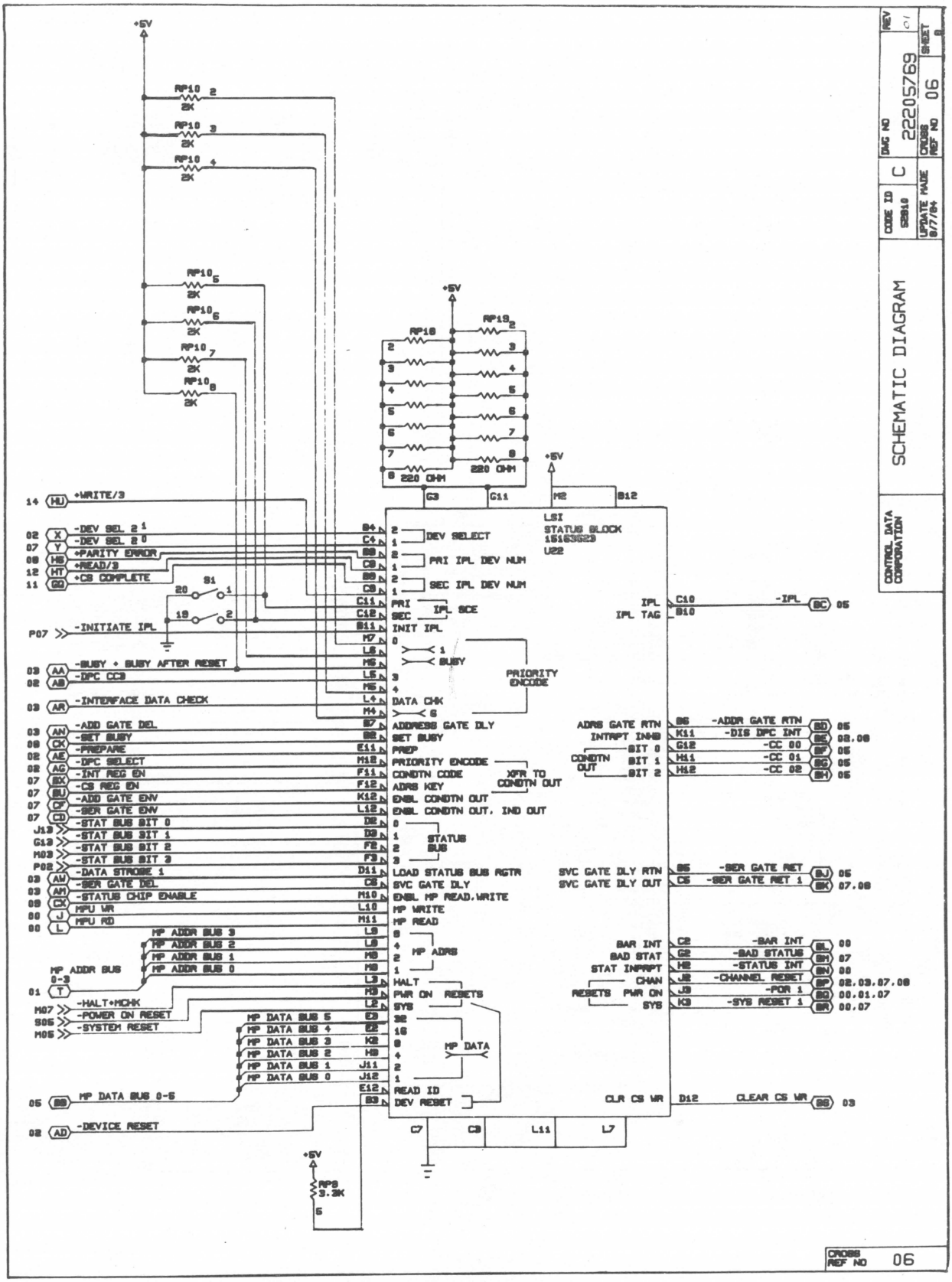
SCHEMATIC DIAGRAM
CONTROL DATA CORPORATION
DWG NO 22205769
REV C
SHEET 8
CODE ID 52810
UPDATE MADE 8/7/84
CROSS REF NO 06
LSI
STATUS BLOCK
15163823
U22
DEV SELECT
PRI IPL DEV NUM
SEC IPL DEV NUM
IPL SCE
INIT IPL
BUSY
PRIORITY ENCODE
DATA CHK
ADDRESS GATE DLY
SET BUSY
PREP
PRIORITY ENCODE
CONDTN CODE
ADRS KEY
XFR TO CONDTN OUT
ENBL CONDTN OUT
ENBL CONDTN OUT, IND OUT
STATUS BUS
LOAD STATUS BUS RGTR
SVC GATE DLY
ENBL MP READ.WRITE
MP WRITE
MP READ
MP ADRS
HALT
PWR ON RESETS
SYS
MP DATA
READ ID
DEV RESET
CLR CS WR
IPL
IPL TAG
ADRS GATE RTN
INTRPT INHB
CONDTN OUT
SVC GATE DLY RTN
SVC GATE DLY OUT
BAR INT
BAD STAT
STAT INPRPT
CHAN
RESETS PWR ON
SYS
+5V
RP10 2 2K
RP10 3 2K
RP10 4 2K
RP10 5 2K
RP10 6 2K
RP10 7 2K
RP10 8 2K
RP18 220 OHM
RP19 220 OHM
S1
RP8 3.2K
+WRITE/3
-DEV SEL 2 1
-DEV SEL 2 0
+PARITY ERROR
+READ/3
+CS COMPLETE
-INITIATE IPL
-BUSY + BUSY AFTER RESET
-DPC CC3
-INTERFACE DATA CHECK
-ADD GATE DEL
-SET BUSY
-PREPARE
-DPC SELECT
-INT REG EN
-CS REG EN
-ADD GATE ENV
-SER GATE ENV
-STAT BUS BIT 0
-STAT BUS BIT 1
-STAT BUS BIT 2
-STAT BUS BIT 3
-DATA STROBE 1
-SER GATE DEL
-STATUS CHIP ENABLE
MPU WR
MPU RD
MP ADDR BUS 3
MP ADDR BUS 2
MP ADDR BUS 1
MP ADDR BUS 0
MP ADDR BUS 0-3
-HALT+MCHK
-POWER ON RESET
-SYSTEM RESET
MP DATA BUS 5
MP DATA BUS 4
MP DATA BUS 3
MP DATA BUS 2
MP DATA BUS 1
MP DATA BUS 0
MP DATA BUS 0-5
-DEVICE RESET
-IPL
-ADDR GATE RTN
-DIS DPC INT
-CC 00
-CC 01
-CC 02
-SER GATE RET
-SER GATE RET 1
-BAR INT
-BAD STATUS
-STATUS INT
-CHANNEL RESET
-POR 1
-SYS RESET 1
CLEAR CS WR

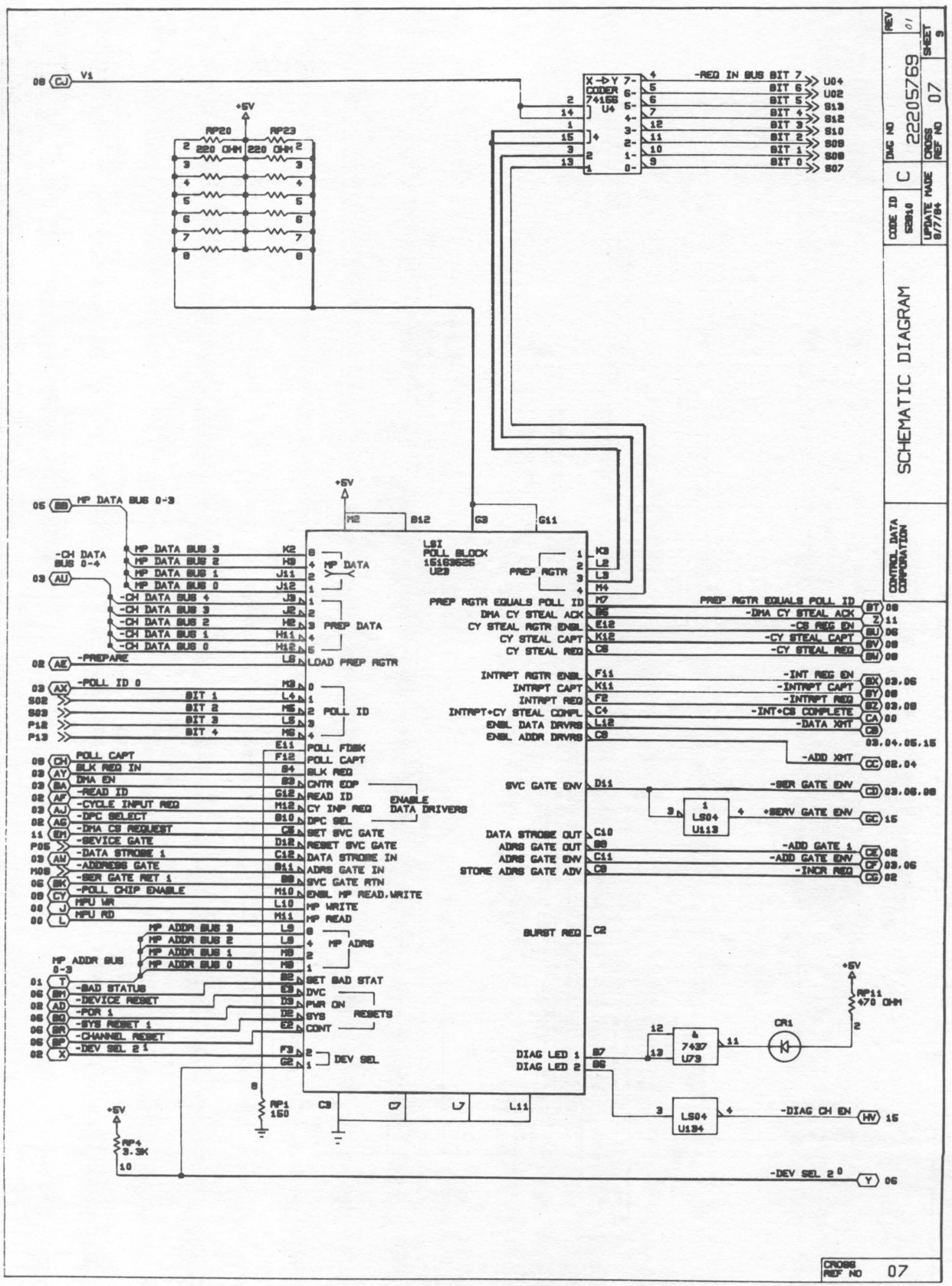
SCHEMATIC DIAGRAM
CONTROL DATA CORPORATION
DWG NO 22205769
REV 01
SHEET 9
CROSS REF NO 07
CODE ID 52810
C
UPDATE MADE 8/7/84
LSI POLL BLOCK 15163625 U29
PREP RGTR
MP DATA
PREP DATA
LOAD PREP RGTR
POLL ID
POLL FDBK
POLL CAPT
BLK REQ
CNTR EOP
READ ID
CY INP REQ
DPC SEL
SET SVC GATE
RESET SVC GATE
DATA STROBE IN
ADRS GATE IN
SVC GATE RTN
ENBL MP READ,WRITE
MP WRITE
MP READ
MP ADRS
SET BAD STAT
DVC
PWR ON
SYS
CONT
DEV SEL
ENABLE DATA DRIVERS
RESETS
PREP RGTR EQUALS POLL ID
DMA CY STEAL ACK
CY STEAL RQTR ENBL
CY STEAL CAPT
CY STEAL REQ
INTRPT RQTR ENBL
INTRPT CAPT
INTRPT REQ
INTRPT+CY STEAL COMPL
ENBL DATA DRVRS
ENBL ADDR DRVRS
SVC GATE ENV
DATA STROBE OUT
ADRS GATE OUT
ADRS GATE ENV
STORE ADRS GATE ADV
BURST REQ
DIAG LED 1
DIAG LED 2
-REQ IN BUS BIT 7
BIT 6
BIT 5
BIT 4
BIT 3
BIT 2
BIT 1
BIT 0
MP DATA BUS 0-3
-CH DATA BUS 0-4
MP ADDR BUS 0-3
-PREPARE
-POLL ID 0
BIT 1
BIT 2
BIT 3
BIT 4
POLL CAPT
BLK REQ IN
DMA EN
-READ ID
-CYCLE INPUT REQ
-DPC SELECT
-DMA CS REQUEST
-DEVICE GATE
-DATA STROBE 1
-ADDRESS GATE
-SER GATE RET 1
-POLL CHIP ENABLE
MPU WR
MPU RD
-BAD STATUS
-DEVICE RESET
-POR 1
-SYS RESET 1
-CHANNEL RESET
-DEV SEL 2 1
-DEV SEL 2 0
-DMA CY STEAL ACK
-CS REG EN
-CY STEAL CAPT
-CY STEAL REQ
-INT REG EN
-INTRPT CAPT
-INTRPT REQ
-INT+CS COMPLETE
-DATA XMT
-ADD XMT
-SER GATE ENV
+SERV GATE ENV
-ADD GATE 1
-ADD GATE ENV
-INCR REQ
-DIAG CH EN
RP20 220 OHM
RP23 220 OHM
RP1 150
RP4 3.3K
RP11 470 OHM
CR1
LS04 U113
LS04 U134
7437 U79
CROSS REF NO 07

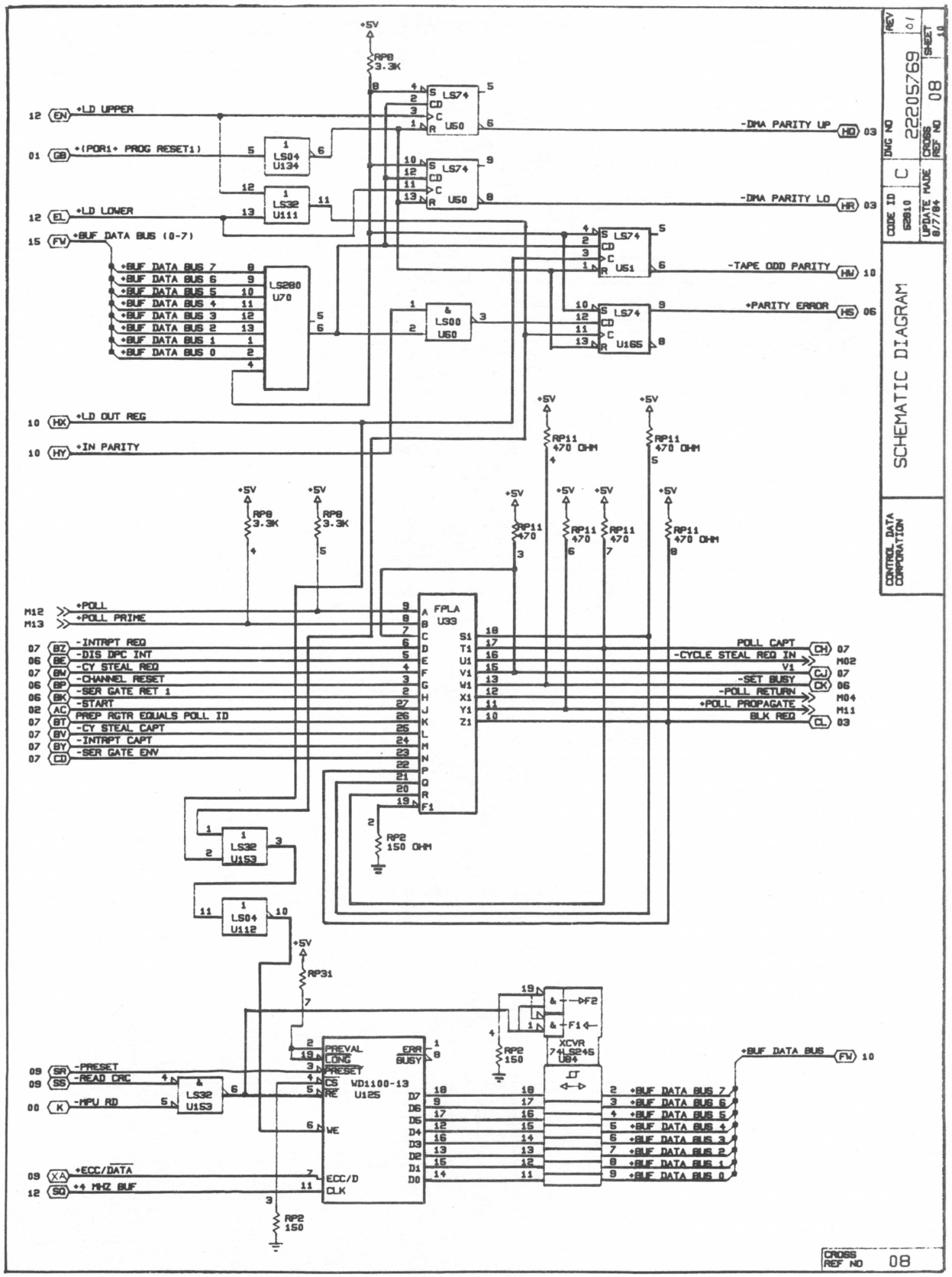
SCHEMATIC DIAGRAM
CONTROL DATA CORPORATION
DWG NO 22205769
REV 01
SHEET 10
CROSS REF NO 08
CODE ID C
UPDATE MADE 6/7/84
+LD UPPER
+(POR1+ PROG RESET1)
+LD LOWER
+BUF DATA BUS (0-7)
+LD OUT REG
+IN PARITY
-DMA PARITY UP
-DMA PARITY LO
-TAPE ODD PARITY
+PARITY ERROR
+POLL
+POLL PRIME
-INTRPT REQ
-DIS DPC INT
-CY STEAL REQ
-CHANNEL RESET
-SER GATE RET 1
-START
PREP RGTR EQUALS POLL ID
-CY STEAL CAPT
-INTRPT CAPT
-SER GATE ENV
POLL CAPT
-CYCLE STEAL REQ IN
-SET BUSY
-POLL RETURN
+POLL PROPAGATE
BLK REQ
-PRESET
-READ CRC
-MPU RD
+ECC/DATA
+4 MHZ BUF
+BUF DATA BUS
WD1100-13
XCVR 74LS245

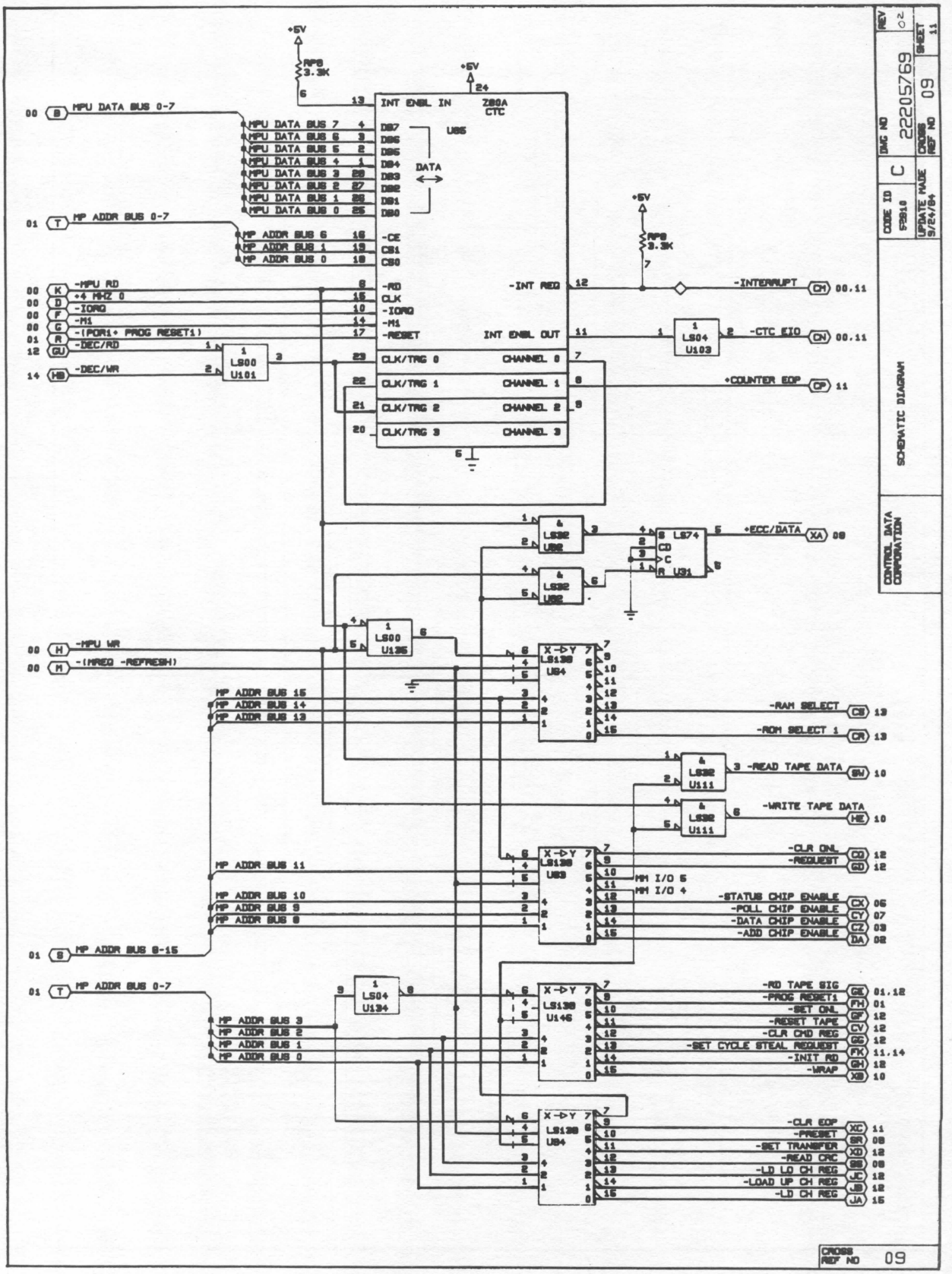
+5V
RP8
3.3K
INT ENBL IN
Z80A CTC
U85
DATA
MPU DATA BUS 0-7
MP ADDR BUS 0-7
-MPU RD
+4 MHZ 0
-IORQ
-M1
-(POR1+ PROG RESET1)
-DEC/RD
-DEC/WR
-INT REQ
-INTERRUPT
-CTC EIO
+COUNTER EOP
CLK/TRG 0
CLK/TRG 1
CLK/TRG 2
CLK/TRG 3
CHANNEL 0
CHANNEL 1
CHANNEL 2
CHANNEL 3
INT ENBL OUT
LS00 U101
LS04 U103
LS74 U91
LS32 U82
+ECC/DATA
-MPU WR
-(MREQ -REFRESH)
LS00 U135
X-Y LS139 U84
MP ADDR BUS 15
MP ADDR BUS 14
MP ADDR BUS 13
-RAM SELECT
-ROM SELECT 1
LS32 U111
-READ TAPE DATA
-WRITE TAPE DATA
MP ADDR BUS 11
MP ADDR BUS 10
MP ADDR BUS 9
MP ADDR BUS 8
MP ADDR BUS 8-15
MM I/O 5
MM I/O 4
-CLR CNL
-REQUEST
-STATUS CHIP ENABLE
-POLL CHIP ENABLE
-DATA CHIP ENABLE
-ADD CHIP ENABLE
LS04 U134
MP ADDR BUS 3
MP ADDR BUS 2
MP ADDR BUS 1
MP ADDR BUS 0
X-Y LS139 U146
-RD TAPE SIG
-PROG RESET1
-SET CNL
-RESET TAPE
-CLR CMD REG
-SET CYCLE STEAL REQUEST
-INIT RD
-WRAP
X-Y LS139 U84
-CLR EOP
-PRESET
-SET TRANSFER
-READ CRC
-LD LO CH REG
-LOAD UP CH REG
-LD CH REG
REV 02
DWG NO 22205769
SHEET 11
CROSS REF NO 09
CODE ID 9391C
UPDATE MADE 9/24/84
SCHEMATIC DIAGRAM
CONTROL DATA CORPORATION
CROSS REF NO 09

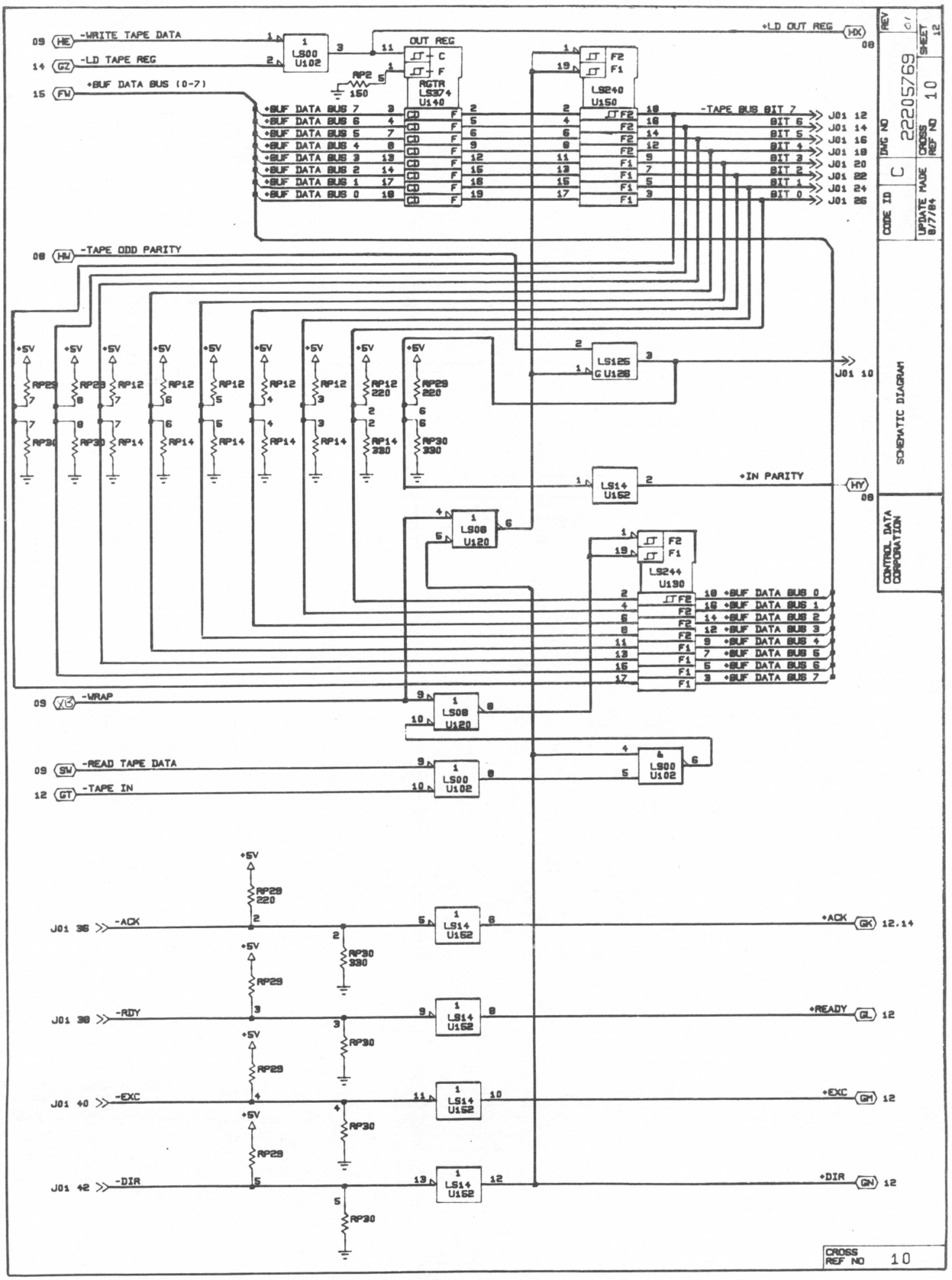
-WRITE TAPE DATA
-LD TAPE REG
+BUF DATA BUS (0-7)
OUT REG
RGTR LS374 U140
LS240 U150
+LD OUT REG
-TAPE BUS BIT 7
BIT 6
BIT 5
BIT 4
BIT 3
BIT 2
BIT 1
BIT 0
-TAPE ODD PARITY
LS125 U126
+IN PARITY
LS14 U152
LS08 U120
LS244 U130
-WRAP
-READ TAPE DATA
-TAPE IN
LS00 U102
-ACK
-RDY
-EXC
-DIR
+ACK
+READY
+EXC
+DIR
DWG NO 2220576
REV C
SHEET 10
CROSS REF NO 10
CODE ID C
UPDATE MADE 8/7/84
SCHEMATIC DIAGRAM
CONTROL DATA CORPORATION

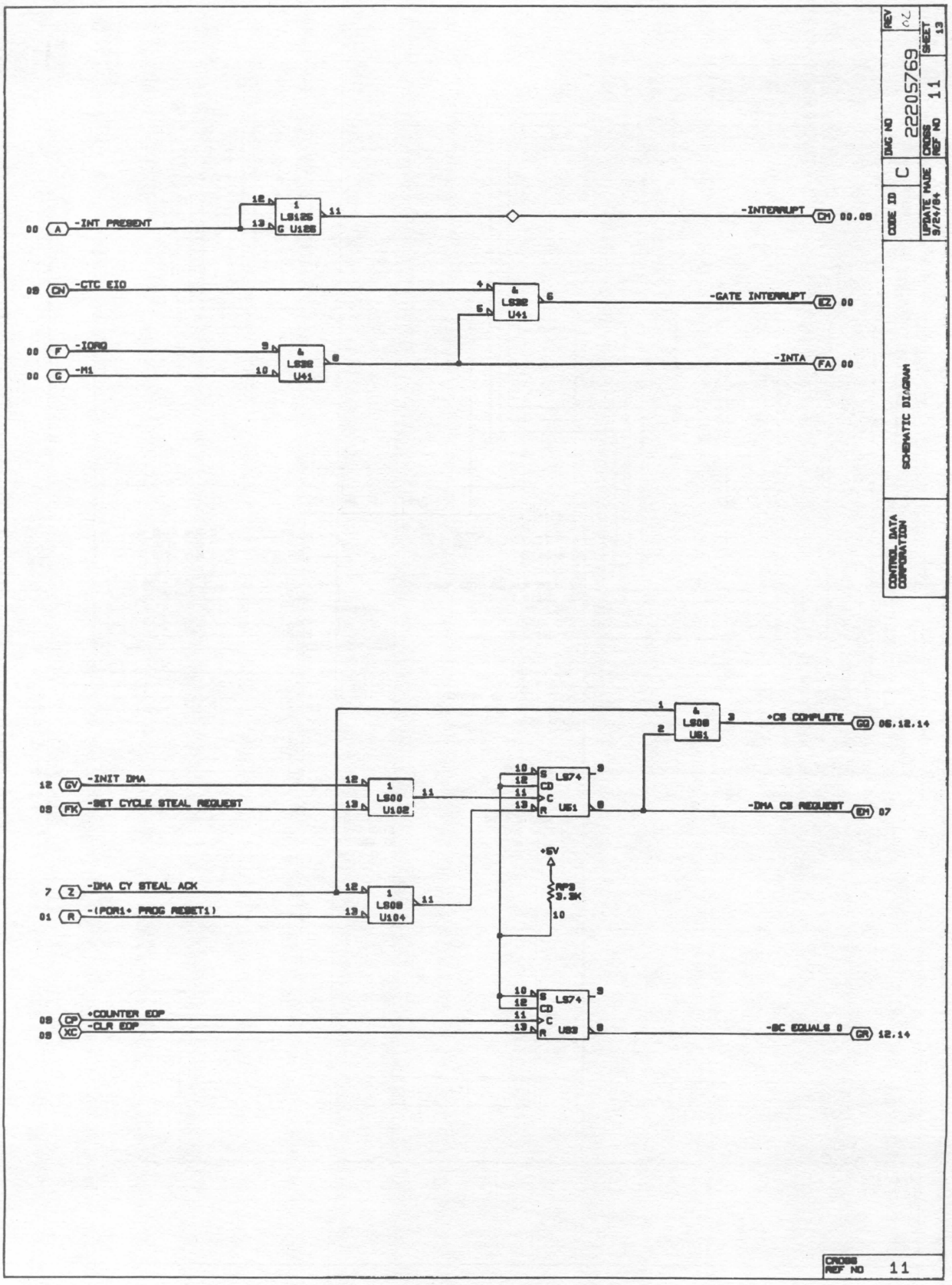
REV 02
SHEET 13
DWG NO 22205769
CROSS REF NO 11
CODE ID C
UPDATE MADE 9/24/84
SCHEMATIC DIAGRAM
CONTROL DATA CORPORATION
-INT PRESENT
-INTERRUPT
-CTC EIO
-GATE INTERRUPT
-IORQ
-M1
-INTA
-INIT DMA
-SET CYCLE STEAL REQUEST
+CS COMPLETE
-DMA CS REQUEST
-DMA CY STEAL ACK
-(POR1+ PROG RESET1)
+5V
RP3 3.3K
+COUNTER EOP
-CLR EOP
-BC EQUALS 0
CROSS REF NO 11

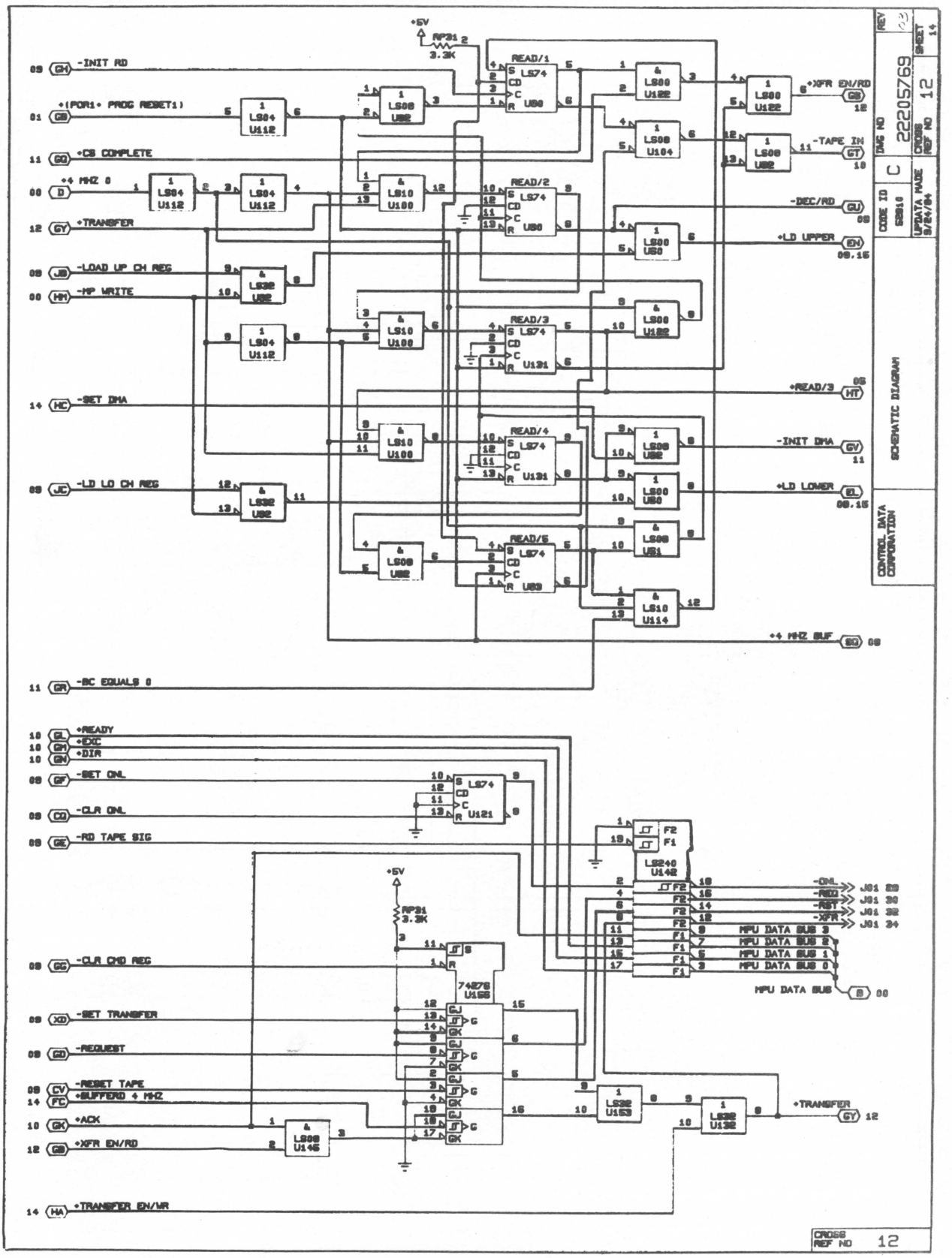
+5V
RP21 2
3.3K
READ/1
READ/2
READ/3
READ/4
READ/5
-INIT RD
+(POR1+ PROG RESET1)
+CS COMPLETE
+4 MHZ 0
+TRANSFER
-LOAD UP CH REG
-MP WRITE
-SET DMA
-LD LO CH REG
-BC EQUALS 0
+XFR EN/RD
-TAPE IN
-DEC/RD
+LD UPPER
+READ/3
-INIT DMA
+LD LOWER
+4 MHZ BUF
+READY
+EXC
+DIR
-SET ONL
-CLR ONL
-RD TAPE SIG
-CLR CMD REG
-SET TRANSFER
-REQUEST
-RESET TAPE
+BUFFERD 4 MHZ
+ACK
+XFR EN/RD
+TRANSFER EN/WR
-ONL
-RED
-RST
-XFR
MPU DATA SUB 3
MPU DATA SUB 2
MPU DATA SUB 1
MPU DATA SUB 0
MPU DATA BUS
REV
DWG NO 22205769
SHEET 14
CROSS REF NO 12
CODE ID C
SCHEMATIC DIAGRAM
CONTROL DATA CORPORATION
CROSS REF NO 12

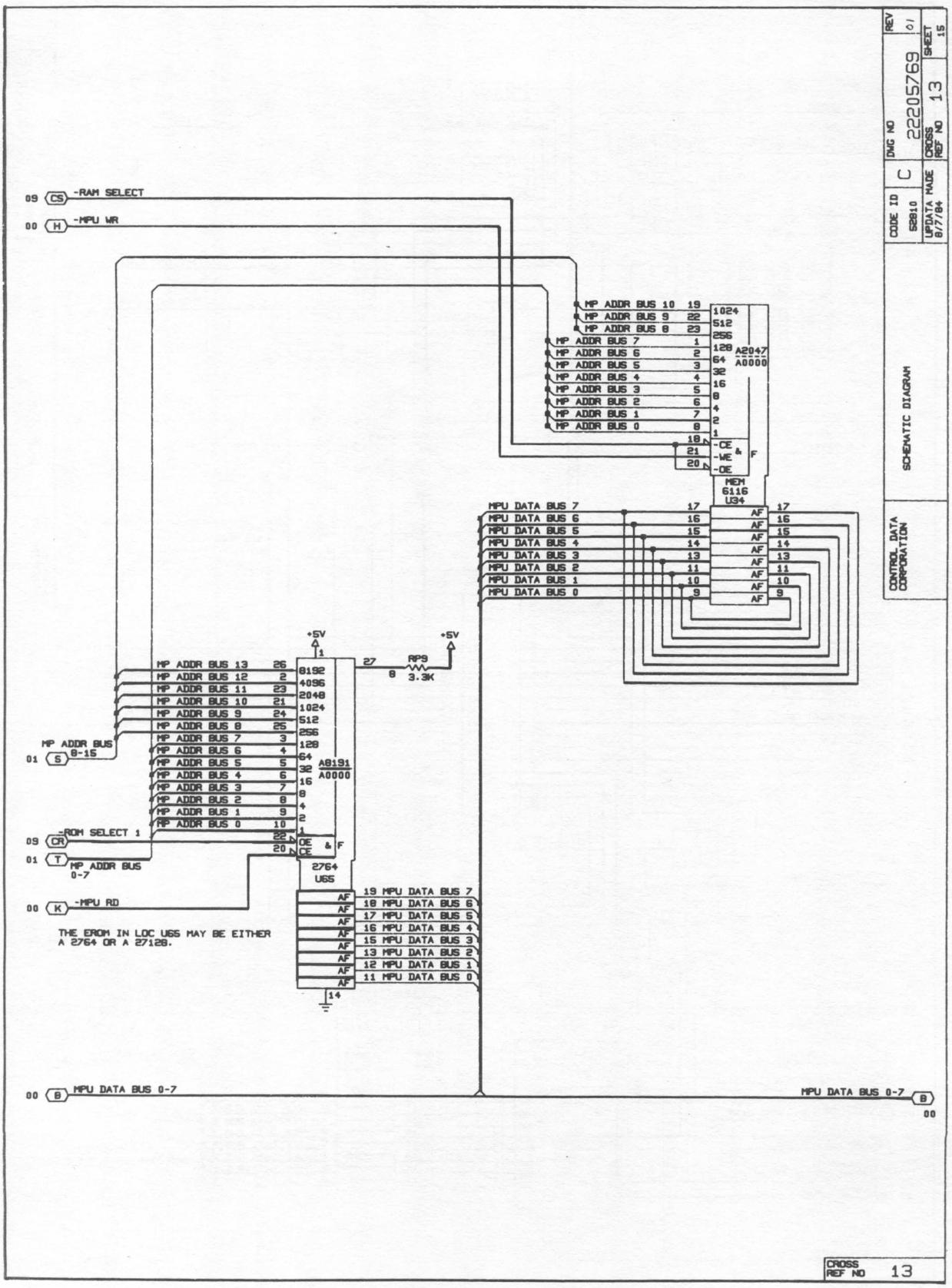
REV 01
SHEET 15
DWG NO 22205769
CROSS REF NO 13
CODE ID C
52810
UPDATA MADE 8/7/84
SCHEMATIC DIAGRAM
CONTROL DATA CORPORATION
09 CS -RAM SELECT
00 H -MPU WR
MP ADDR BUS 10 19
MP ADDR BUS 9 22
MP ADDR BUS 8 23
MP ADDR BUS 7 1
MP ADDR BUS 6 2
MP ADDR BUS 5 3
MP ADDR BUS 4 4
MP ADDR BUS 3 5
MP ADDR BUS 2 6
MP ADDR BUS 1 7
MP ADDR BUS 0 8
1024
512
256
128
64
32
16
8
4
2
1
A2047
A0000
18 -CE
21 -WE
20 -OE
&
F
MEM
6116
U34
MPU DATA BUS 7 17
MPU DATA BUS 6 16
MPU DATA BUS 5 15
MPU DATA BUS 4 14
MPU DATA BUS 3 13
MPU DATA BUS 2 11
MPU DATA BUS 1 10
MPU DATA BUS 0 9
AF
+5V
1
27
RP9
8
3.3K
MP ADDR BUS 13 26
MP ADDR BUS 12 2
MP ADDR BUS 11 23
MP ADDR BUS 10 21
MP ADDR BUS 9 24
MP ADDR BUS 8 25
MP ADDR BUS 7 3
MP ADDR BUS 6 4
MP ADDR BUS 5 5
MP ADDR BUS 4 6
MP ADDR BUS 3 7
MP ADDR BUS 2 8
MP ADDR BUS 1 9
MP ADDR BUS 0 10
8192
4096
2048
1024
512
256
128
64
32
16
8
4
2
1
A8191
A0000
01 S MP ADDR BUS 8-15
09 CR -ROM SELECT 1
22
01 T MP ADDR BUS 0-7
20
OE
CE
&
F
2764
U65
00 K -MPU RD
19 MPU DATA BUS 7
18 MPU DATA BUS 6
17 MPU DATA BUS 5
16 MPU DATA BUS 4
15 MPU DATA BUS 3
13 MPU DATA BUS 2
12 MPU DATA BUS 1
11 MPU DATA BUS 0
14
THE EROM IN LOC U65 MAY BE EITHER
A 2764 OR A 27128.
00 B MPU DATA BUS 0-7
MPU DATA BUS 0-7 B
00
CROSS REF NO 13

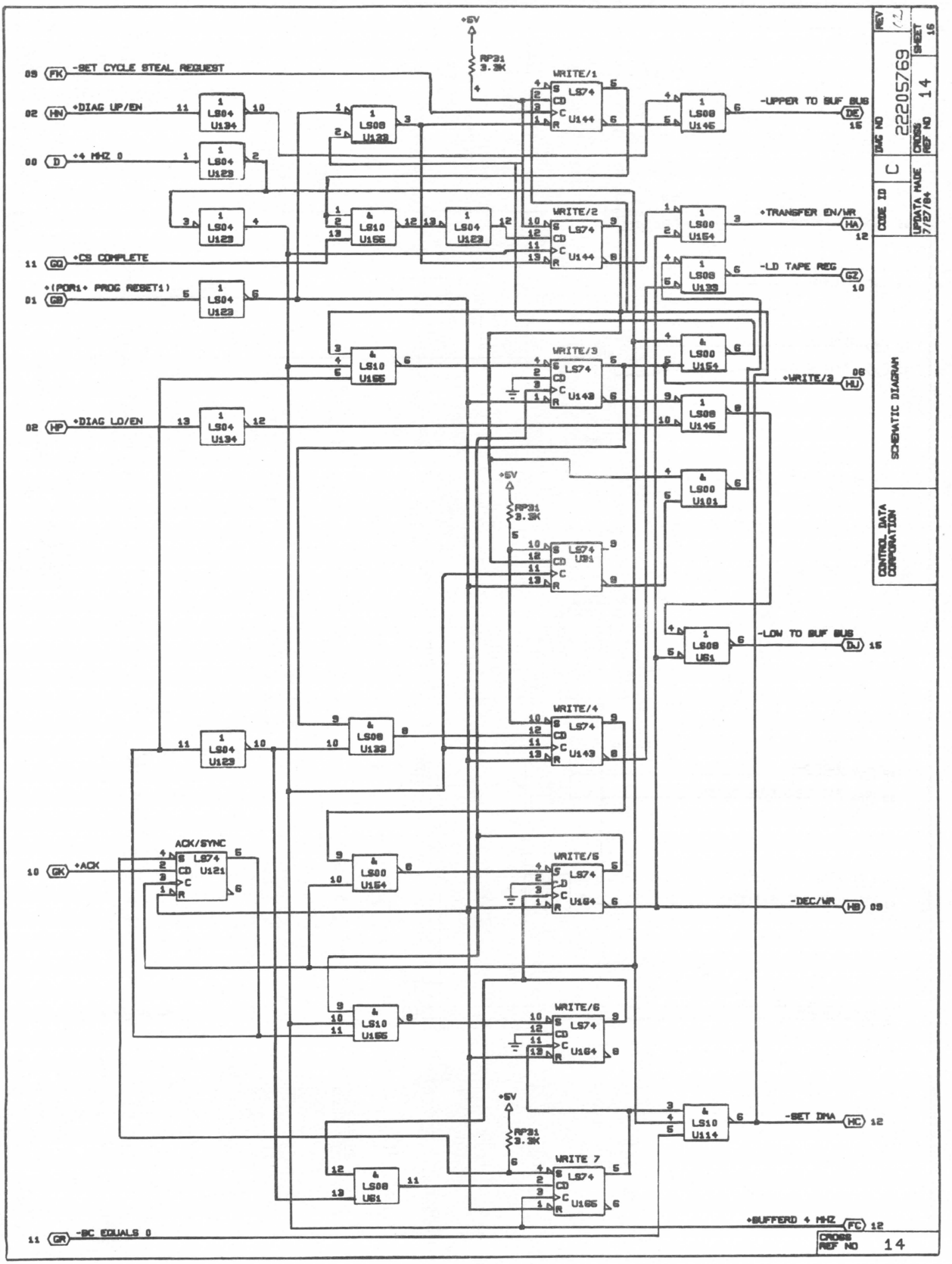
+5V
RP31
3.3K
WRITE/1
WRITE/2
WRITE/3
WRITE/4
WRITE/5
WRITE/6
WRITE 7
ACK/SYNC
09 FK -SET CYCLE STEAL REQUEST
02 HN +DIAG UP/EN
00 D +4 MHZ 0
11 GQ +CS COMPLETE
01 GB +(POR1+ PROG RESET1)
02 HP +DIAG LO/EN
10 GK +ACK
11 GR -BC EQUALS 0
-UPPER TO BUF BUS DE 15
+TRANSFER EN/WR HA 12
-LD TAPE REG GZ 10
+WRITE/2 06 HJ
-LOW TO BUF BUS DJ 15
-DEC/WR HB 09
-SET DMA HC 12
+BUFFERD 4 MHZ FC 12
REV
SHEET 16
DWG NO 2205769
CROSS REF NO 14
CODE ID C
UPDATA MADE 7/27/84
SCHEMATIC DIAGRAM
CONTROL DATA CORPORATION
CROSS REF NO 14

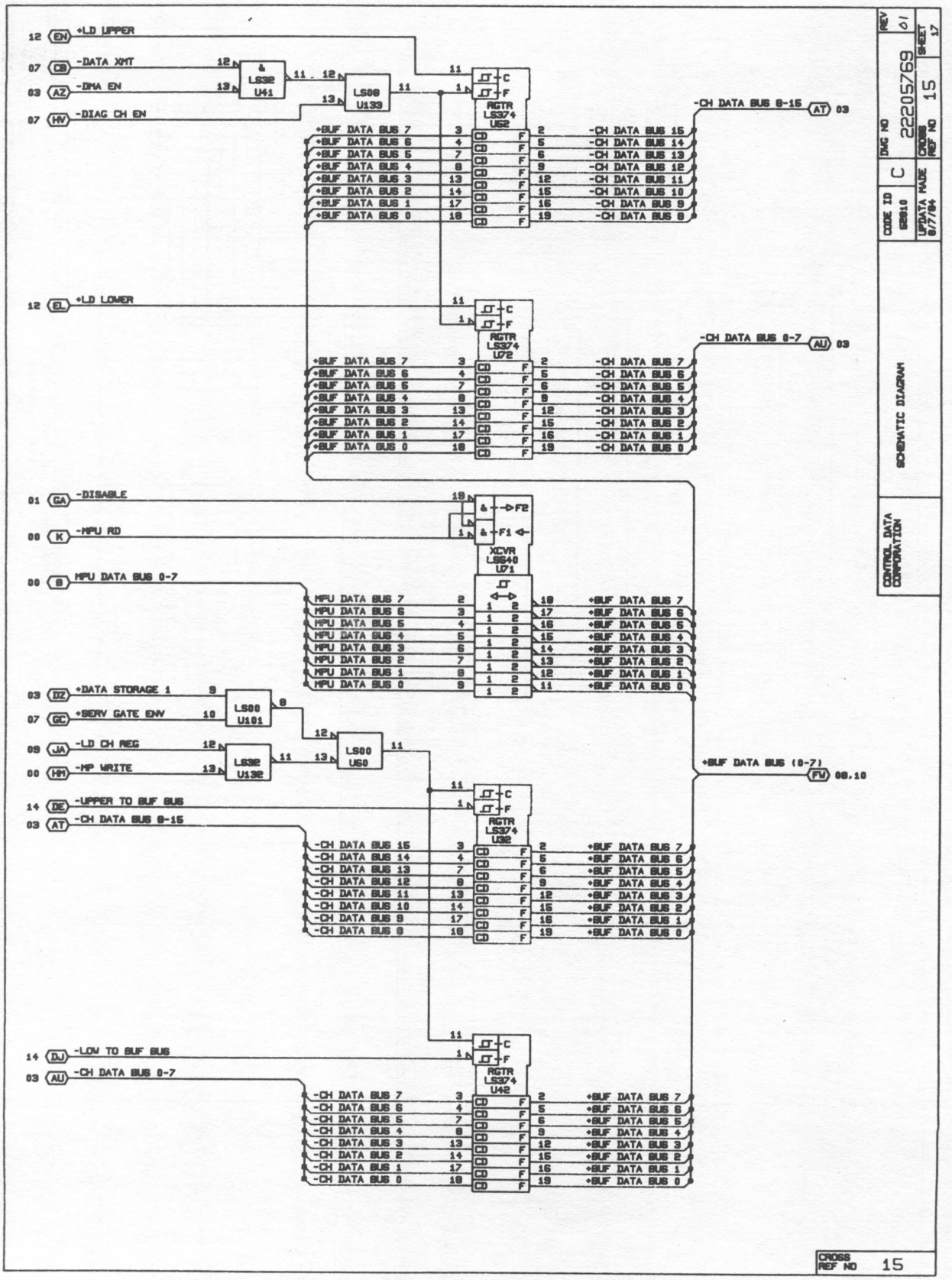
+LD UPPER
-DATA XMT
-DMA EN
-DIAG CH EN
LS32 U41
LS08 U133
RGTR LS374 U52
-CH DATA BUS 8-15
+LD LOWER
RGTR LS374 U72
-CH DATA BUS 8-7
-DISABLE
-MPU RD
XCVR LS640 U71
MPU DATA BUS 8-7
+DATA STORAGE 1
+SERV GATE ENV
LS00 U101
-LD CH REG
-MP WRITE
LS32 U132
LS00 U50
+BUF DATA BUS (8-7)
-UPPER TO BUF BUS
RGTR LS374 U32
-LOW TO BUF BUS
RGTR LS374 U42
CONTROL DATA CORPORATION
SCHEMATIC DIAGRAM
DWG NO 22205769
REV 01
SHEET 17
CROSS REF NO 15
CODE ID 52810
C
UPDATA MADE 8/7/84
CROSS REF NO 15

The majority of information provided in this section is intended for use only by qualified maintenance personnel. Customers should limit their use of the information to that in the Tape Cartridge Drive Enclosure and Attachment Feature Removal and Replacement subsections.

The tape storage subsystem provides high reliability and minimal maintenance. The modular design allows troubleshooting on a logical progression of checks, enabling fault isolation of a problem to a specific replaceable device within the subsystem. While extensive electronics training and sophisticated test equipment are not required for tape storage subsystem maintenance, only electronics technicians who are familiar with the operation of the Series/1 processor and the tape storage subsystem should maintain the equipment. Understanding subsystem operations and having an adequate supply of repair parts (see section 7) represents a significant part of overall tape storage subsystem maintenance.

This section enables you to isolate faults in a tape storage subsystem in the shortest time possible. Included in this section are relevant safety instructions, a list of recommended troubleshooting equipment, preventive maintenance instructions, troubleshooting procedures, module removal and replacement instructions, and diagnostics. The diagnostics information contains information related to the IBM diagnostic monitor (i.e., configurator table information, the common halt list, and an explanation of the various commands).

MAINTENANCE PHILOSOPHY

The primary maintenance philosophy of CDC allows parts replacement at the field-replaceable unit (FRU) level in the field. Return printed-circuit boards (PCBs), power supplies, and other modular items for service, as required. (For details, consult the project manager or field service department.)

SAFETY INSTRUCTIONS

You should read and fully understand the safety instructions that follow before you undertake any tape storage subsystem maintenance. You should also periodically review these instructions.

WARNING

Before performing maintenance on the tape storage subsystem, disconnect the tape cartridge drive from the designated Series/1 outlet.

CAUTION

Use caution while working near heads. Since fingerprints can damage heads, clean heads immediately if you touch them (refer to the preventive maintenance instructions for the subsystem).

CAUTION

Never remove or install the tape cartridge drive or attachment feature while Series/1 power is applied.

CAUTION

Never force the tape storage subsystem attachment feature card into the designated card slot in the Series/1 card chassis (or Series/1 expansion chassis). The card should seat smoothly and firmly. If you cannot seat the card easily, check for damage on the card or connector.

CAUTION

Static discharge can easily damage certain integrated circuits (ICs). Before handling loose ICs (particularly memory units), touch a grounded surface first.

RECOMMENDED TOOLS AND TEST EQUIPMENT

While you do not need sophisticated tools and test equipment for tape storage subsystem maintenance, you should have available at your facility those items listed in table 6-1 to aid in troubleshooting and making necessary repairs. You can obtain items manufactured by CDC directly from the factory. Table 6-2 provides a listing of the diagnostic tests contained on the floppy diskette supplied as part of the tape storage subsystem installation kit.

PREVENTIVE MAINTENANCE

Preventive maintenance, including inspections and cleaning, is perhaps the single most important element of tape storage subsystem maintenance. Recognizing and correcting a potential problem before a failure occurs can minimize costly downtime and major repair. The following paragraphs discuss tape storage subsystem inspection and head cleaning.

TABLE 6-1. RECOMMENDED TOOLS AND TEST EQUIPMENT

Item	Part Number	Manufacturer	Requirements	Usage
Cotton swabs, lint free, long	N/A	Any commercial source	N/A	Head cleaning
Alcohol, Isopropyl	N/A	Any commercial source	N/A	Head cleaning
Oscilloscope†	454	Tektronix	Dual trace	Checking signals
Tape cartridge, blank	DC600A	3M	600-Feet	Data backup
Test cartridge, azimuth †	TBD	Wangtek	N/A	Azimuth adjustment
Test cartridge, alignment †	TBD	Wangtek	N/A	Alignment adjustment
Tape drive exerciser †	TBD †	Wangtek	N/A	Drive testing
Head adjusting tool, azimuth †	200119-001	Wangtek	N/A	Azimuth adjustment
Allen wrench, 5/64-inch	N/A	Any commercial source	N/A	Module removal and adjustments
Allen wrench, 3/32-inch	N/A	Any commercial source	N/A	Module removal and adjustments
Allen wrench, 0.035-inch	N/A	Any commercial source	N/A	Module removal and adjustments
Screwdriver set, small	N/A	Any commercial source		Module removal and adjustments
Test cartridge, diagnostics	TBD	CDC	N/A	Maintenance checks

† Optional equipment; maintain only if component-level maintenance is to be performed in the field.

TABLE 6-2. TAPE STORAGE SUBSYSTEM DIAGNOSTICS

Test Number	Description
5900	Channel interface test checks operation of the attachment feature.
5901	Attachment and Z80 test checks interrupt level, condition codes and Z80 operations.
5903	Tape unit test checks the tape unit performance characteristics.
5908	Erase tape test verifies operation of the ERASE TAPE command.
5909	Retension tape test verifies operation of the RE-TENSION TAPE command.

INSPECTION

Tape storage subsystem inspection is a relatively simple operation consisting of the following steps:

1. Verify that all tape storage subsystem controls and indicators are functional.

2. Verify that the tape storage subsystem attachment feature is properly seated in the Series/1 I/O chassis (or the expansion chassis).

3. Check all subsystem cable assemblies for damage to cabling and connectors (e.g., frayed cabling, dented connectors, etc.). Also, check that interconnect cable assemblies are not inadvertently placed in areas where damaged is likely.

HEAD CLEANING

To ensure proper tape-to-head compliance and to prevent data loss, you must clean the tape cartridge drive head after every 8 hours of operation. If you are using a new tape cartridge, you should clean the head following the first 2 hours of use. Perform the following steps to clean the tape cartridge drive heads:

1. Obtain the head cleaning supplies listed in table 6-1.

2. Turn off the tape cartridge drive. Disconnect the tape storage subsystem ac power cord from the designated Series/1 outlet.

3. Release the head by pressing the release tab in all the way, using the eraser end of a pencil (or other suitable device). You must push the release tab in until the mechanism is released and the tape cartridge bed is moved out from the drive. Refer to figure 6-1 for an illustration showing the location of the release tab.

4. Clean the tape cartridge drive head by gently rubbing the surface of the head with a cotton swab dipped in isopropyl alcohol (or other suitable tape head cleaner solution).

5. Press the release tab in all the way by using the eraser end of a pencil (or other suitable device).

6. Plug in and turn on the tape storage subsystem.

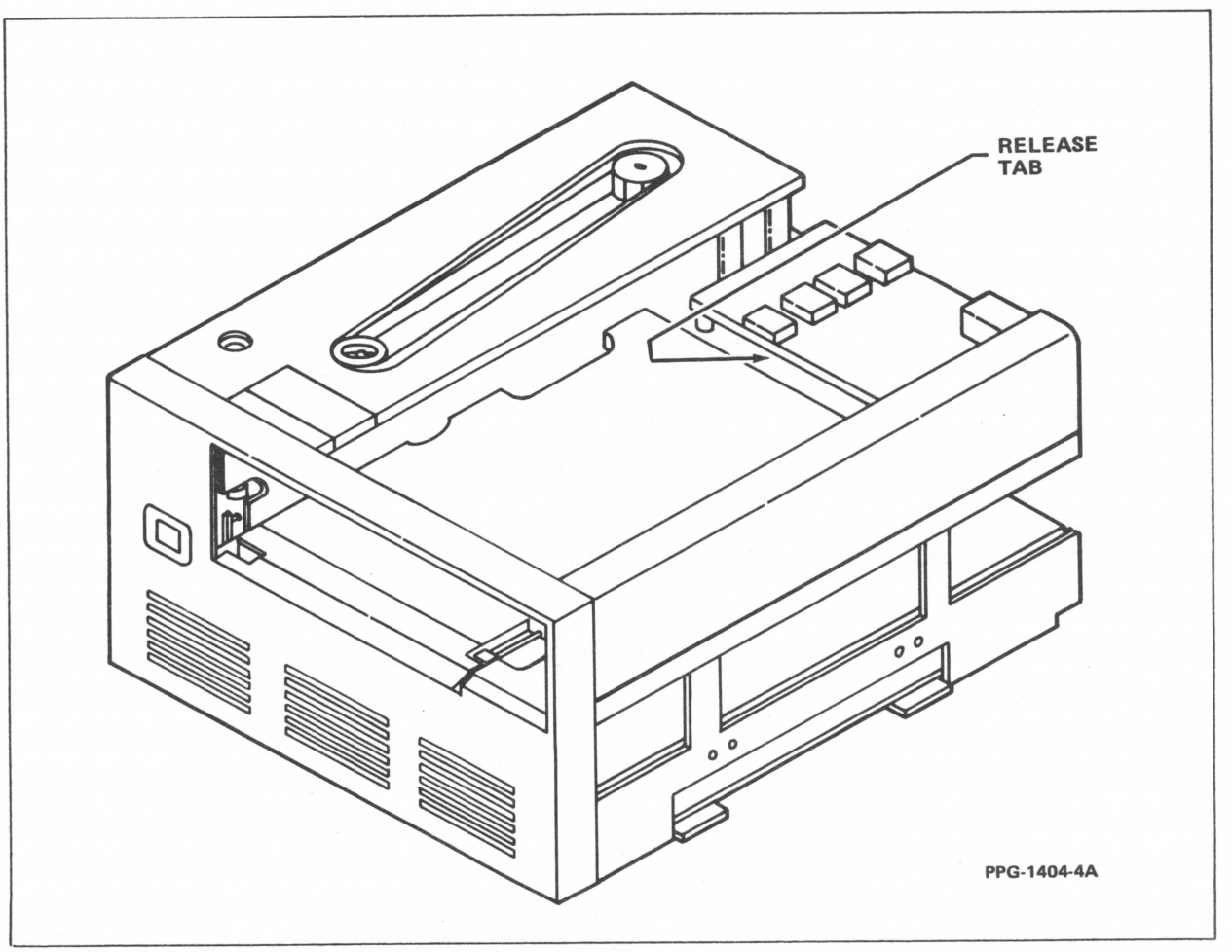

Figure 6-1. Tape Cartridge Drive Release Tab

TAPE STORAGE SUBSYSTEM TROUBLESHOOTING

The following paragraphs describe tape storage subsystem troubleshooting, which is the logical process of isolating a subsystem fault to one of the following replaceable modules:

- Tape cartridge drive, including formatter circuit card assemblies
- Power supply
- Fan
- Interface cable assemblies
- Attachment feature card

Once you have isolated a fault or suspected fault to one of these replaceable FRUs, the recommended corrective maintenance action(s) is to remove and replace that defective FRU.

NOTE

If you must remove and replace a FRU, refer to the Module Removal and Replacement subsection.

Tape storage subsystem troubleshooting consists of running the specially developed self-test diagnostics to isolate the failed module or the suspected faulty module. The self-test diagnostics consist of three automatically executed diagnostics and two optional tests as previously listed in table 6-2. The three automatically executed diagnostics verify the correct operation of the channel interface, the attachment feature card and the Z80A, and the tape unit. The two optional tests verify the command to erase the tape and the command to re-tension the tape.

The discussion of the self-test diagnostics includes the following topics:

- Procedure to load and execute the self-test diagnostics
- Error abort message and the procedure to display the message on an operator/programmer panel
- SAMS (structured analysis method): definitions, description of SAM format, and SAMs used to evaluate the results of the tape storage self-test diagnostics

If the self-test diagnostics fail to isolate the problem, go to the trouble-shooting table (table 6-3) to continue testing.

RUNNING SELF-TEST DIAGNOSTICS

Perform the following steps to load and run the tape storage subsystem self-test diagnostics:

NOTE

This procedure assumes the subsystem attaches to a flexible disk drive and a Series/1 operator/programmer panel.

1. Insert the diagnostics diskette supplied as part of the installation kit into the Series/1 flexible disk drive (FDD).

2. Turn on the tape cartridge drive.

3. Set the IPL Source switch on the Series/1 operator/programmer panel to the Alternate or Primary position, as applicable, to enable loading from the diskette.

4. Set the Mode switch on the Series/1 operator/programmer panel to the Diagnostic position.

5. Press the Load switch on the Series/1 operator/programmer panel.

6. Go to the designated Series/1 data entry console (Viking terminal, TTY terminal, etc.).

NOTE

Execution of the IPL diagnostic residing on the diagnostic diskette begins. Assuming the IPL diagnostic detects no errors, execution completes in approximately 10 seconds. A RDY ENTER message displayed on the CRT screen of the display unit (if used) and a 3800 (hexadecimal) code displayed in the register indicators of the operator panel indicates completion of the IPL diagnostic. If the Series/1 stops with any other code displayed, refer to the Common Halt List (elsewhere in this section) for corrective action.

7. After retrieving the diagnostic program from the diskette and loading the program into the Series/1, the following is displayed on the operator's data entry console if IBM and CDC devices with identical ID codes are configured to the same field diagnostic diskette (either an IBM or CDC diskette):

   - On display screen:
     CONF ERROR - TABLE DEVICE TYPE VS TABLE READ ID

   - On operator/programmer panel:
     HALT code 3842 (configuration error)

   Ignore this error. The error message displays because both the IBM and CDC devices have the same ID code.

8. After successful completion of the IPL diagnostic, select and execute the tape drive automatic diagnostics. Enter test number 5900 as follows:

   a. Using the display/keyboard, enter B5900 and press the ENTER key (or the CR key on a TTY).

   b. Using the operator/programmer panel:

      1) Press the Data Buffer switch.
      2) Enter B via the register input switches.
      3) Press the Console Interrupt switch.
      4) Press the Data Buffer switch.
      5) Enter 5900 to select the tape drive automatic diagnostics.
      6) Press the Console Interrupt switch twice.

   The three tape drive automatic diagnostics execute in succession.

   The RUN indicator lights during test execution. The executing test number displays in the CRT and in the register indicators of the operator/programmer panel.

   The automatic diagnostics display code 3805 in the register indicators and PT ENTER on the CRT to indicate successful execution. If the diagnostics stop and display any other code, refer to the failing step number of the applicable SAM. The number of the applicable SAM is the same as the number of the failing step. The error message (or indicators†) identify the corrective action.

   If the diagnostics terminate abnormally with no message or a meaningless abort message, retry the automatic tests. If the problem persists, reseat/replace the attachment feature and the I/O cable. Verify the switch settings and/or jumper placement per the attachment feature installation procedure provided in the Installation section of this manual.

9. Enter and execute diagnostic test 5908.

CAUTION

This optional test erases the entire tape. Ensure the proper cartridge is in the tape unit before executing test 5908.

10. Enter and execute diagnostic test 5909. This optional test re-tensions the tape.

---

†Indicators show test number. If using the operator/programmer panel (no CRT), press the Stop switch, the Level 3 switch, and the R0 register switch to display the step number in the indicators.

ERROR ABORT MESSAGES

When a diagnostic aborts, the diagnostic issues an error abort message. If a display station is assigned as the alternate console, the abort message displays in the following format example:

```
      ABORT TEST
TEST   EXIT      DEV    CC    ISB   STEP
59A4   35A2      0013   07FF  0013  0002  4040  4040
DCB0   DCB1      DCB2   DCB3  DCB4  DCB5  DCB6  DCB7
0007   0000      0000   0000  0000  0000  0000  0000
CSS0   CSS1      CSS2   CSS3  CSS4  CSS5  CSS6  CSS7
2E17   0000      0000   0000  0000  0000  0000  0000
CSS8   CSS9      CSSA   CSSB  CSSC  CSSD  CSSE  CSSF
4040   4040      4040   4040  4040  4040  4040  4040
I3C01  MAP=6608    STEP=0002
```

Where:

TEST = Test unit ID of the routine executing at the time of the abort

EXIT = Exit address (last address entered in R6 by a branch and link instruction)

DEV = Device address

CC = Condition code

ISB = Interrupt status byte returned, if any

STEP = Step number being executed at time of abort

DCB0 thru DCB7 = Diagnostic control bytes

CSS0 thru CSSF = Cycle-steal status bytes, if available

NOTE

If diagnostics end abnormally with no message or a meaningless abort message, retry the automatic tests. If the problem persists, reseat/replace the attachment feature. Verify the switch and jumper placement per the attachment feature installation procedure elsewhere is this manual. Verify the CE test tape cartridge is write enabled and properly inserted in the tape unit.

If the operator/programmer panel is the assigned alternate console, value 66FF displayed in the LED indicators indicates an error abort. Read the error abort message from memory as follows:

NOTE

Level 3 registers R0 through R3 contain the following information:

R0 = step number
R1 = diagnostic test number
R2 = device address
R3 = starting address of abort message block

1. Press the Stop switch; the Stop indicator lights.
2. Press the Level 3 switch.
3. Press the R3 register switch. The LED indicators contain the starting memory address of the error abort message.

NOTE

The first word at this address contains the test unit ID. The remaining words shown in the error abort message example follow in sequence.

4. Press the SAR switch.
5. Enter the memory address through the input switches.
6. Press the Store switch.
7. Press the Main Storage switch. The contents of the first memory address displays in the LED indicators.
8. Continue pressing the Main Storage switch to view each word in sequence.

SAMs

A SAM (structured analysis method) listing is a specialized format used to present troubleshooting information in a logical manner. Figure 6-2 illustrates the basic SAM format. The header information of the SAM provides any applicable assumptions or advisory information. To interpret a SAM, start at the top of the page and determine the response for the first question. Then follow the appropriate dashed line beneath the Y or N response. Answer the remaining questions until the action numbers are reached. Perform the action(s) listed in that column in numerical order to correct the problem.

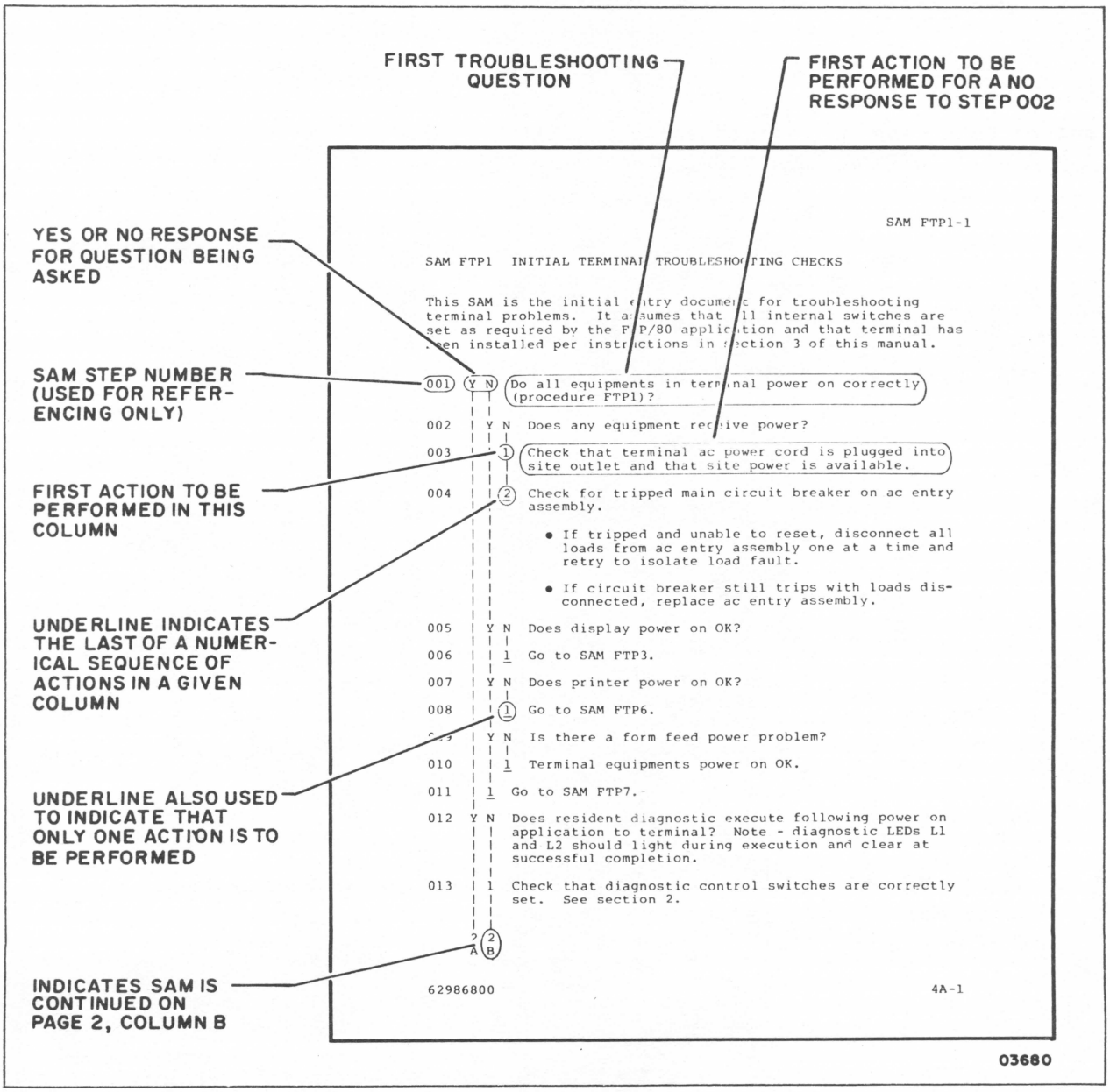

Figure 6-2. SAM Format

SAM 5900 - Channel Interface Test

SAM 5900 analyzes the results of test 5900, the channel interface test.

Test 5900 checks the operation of the attachment feature under direct program control (DPC), using legal and illegal command codes. This test also checks for acceptance of cycle-steal mode commands. The condition codes returned after these commands are checked for command acceptance or rejection, as applicable. Test 5900 automatically branches to test 5901.

Test 5900 is the first test of the tape streamer subsystem diagnostics on the CDC BASIC diskette.

SAM 5900 assumes that entry point A corresponds to step 001.

SAM 5900 - Channel Interface Test 5900-1

```
001  Y N  Halt I/O command (F0).  CC=7?
     | |
002  | 1  Halt I/O command failed.  Go to IBM MAP 0070.  The attachment feature
     |    card is holding down the condition code lines.
     |
003  Y N  Prepare command (60), I bit off.  CC=7?
     | |
004  | Y N  CC=0?
     | | |
005  | | 1  Prepare command failed.  Replace the attachment card.
     | |
006  | 1  Check for the correct device address.  If it is correct, replace the
     |    attachment card.
     |
007  Y N  Read Device ID command (20).  CC=7?
     | |
008  | 1  Read Device ID command rejected.  Replace the attachment card.
     |
009  Y N  Is device ID = 3187?
     | |
010  | 1  Wrong device ID.  Check the device type and the configuration table.
     |    If it is correct, replace the attachment card.
     |
011  Y N  Device Reset command (6F).  CC=7?
     | |
012  | 1  Device Reset command rejected.  Replace the attachment card.
     |
013  Y N  Read Device ID command.  CC=7?
     | |
014  | Y N  CC=2?
     | | |
015  | | 1  Replace the attachment card.
     | |
     2 2 2
     A B C
```

```
     A B
     1 1
     | |
016  | 1  A busy lasts too long after a device reset.  Replace the attachment
     |    card.
     |
017  Y N  Illegal command (00). CC=3?
     | |
018  | 1  No command reject on command 00.  Replace the attachment card.
     | |
019  Y N  Illegal command (01).  CC=3?
     | |
020  | 1  No command reject on 01 command.  Replace the attachment card.
     |
021  Y N  Illegal command (02).  CC=3?
     | |
022  | 1  No command reject on 02 command.  Replace the attachment card.
     |
023  Y N  Illegal command (04).  CC=3?
     | |
024  | 1  No command reject on command 04.  Replace the attachment card.
     |
025  Y N  Illegal command (08).  CC=3?
     | |
026  | 1  No command reject on command 08.  Replace the attachment card.
     |
027  Y N  Illegal command (10).  CC=3?
     | |
028  | 1  No command reject on command 10.  Replace the attachment card.
     |
029  1  No-operation step for 80810-10 Cartridge Tape Streamer Subsystem.
     |
030  2  No-operation step for the 80810-10 Cartridge Tape Streamer Subsystem.
     |
031  Y N  Illegal command (80).  CC=3?
     | |
032  | 1  No command reject on command 80.  Replace the attachment card.
     |
033  Y N  Start command (70).  CC=7?
     | |
034  | 1  Start command rejected.  Replace the attachment card.
     |
035  Y N  Halt I/O command (F0).  CC=7?
     | |
036  | 1  Halt I/O command failed.  Go to IBM MAP 0070.
     |
037  Y N  Start diagnostic 1 command (7D).  CC=7?
     | |
038  | 1  Start diagnostic 1 command rejected.  Replace the attachment card.
     |
039  Y N  Halt I/O command.  CC=7?
     | |
     3 3
     A B
```

	A 2	B 2	
040		1	Halt I/O command failed. Go to IBM MAP 0070.
041	Y	N	Start diagnostic 2 command (7E). CC=7?
042		1	Start diagnostic 2 command failed. Replace the attachment card.
043	Y	N	Halt I/O command. CC=7?
044		1	Halt I/O command failed. Go to IBM MAP 0070.
045	Y	N	Start cycle-steal status command (7F). CC=7?
046		1	Start cycle-steal status command rejected. Replace the attachment card.
047	Y	N	Halt I/O command (F0). CC=7?
048		1	Halt I/O command failed. Go to IBM MAP 0070.
049	Y	N	Prepare command (60) 1110. CC=7?
050		1	Interface data check on the prepare command. Replace the attachment card.
051	Y	N	Prepare command (60) 2222. CC=7?
052		1	Interface data check on the prepare command. Replace the attachment card.
053	Y	N	Prepare command (60) 4444. CC=7?
054		1	Interface data check on the prepare command. Replace the attachment card.
055	Y	N	Prepare command (60) 8888. CC=7?
056		1	Interface data check on the prepare command. Replace the attachment card.
057	Y	N	Prepare command (60) FFFE. CC=7?
058		1	Interface data check on the prepare command. Replace the attachment card.
059	1		Test completed. Go to test 5901.

SAM 5901 - Attachment and Z80 Test

SAM 5901 analyzes the results of test 5901, the attachment and Z80 test.

Test 5901 checks the interrupt level and interrupt condition codes. The test also initiates the Z80 self-test procedures and checks the results of those procedures. The test also performs an input/output wrap test on the attachment feature. Test 5901 automatically branches to test 5903.

Test 5901 links from test 5900. Test 5901 assumes diagnostic test 5901, step 01, entry point corresponds to SAM step 001.

SAM 5901 - Attachment and Z80 Tests 5901-1

```
001  Y N  Halt I/O command (F0).  CC=7?
     | |
002  | 1  Halt I/O command failed.  Go to IBM MAP 0070.
     |
003  Y N  Prepare command level 0.  (600001).  CC=7?
     | |
004  | 1  Prepare command failed.  Go to test 5900.
     |
005  Y N  Start diagnostic 1 command (7D).  CC=7?
     | |
006  | Y N  ISB is not equal to 10XX?
     | | |
007  | | 1  Diagnostic 1 command failed.  Data error from channel.  Replace the
     | |    attachment feature card.
     | |
008  | Y N  Start cycle-steal status command (7F).  CC=0703?
     | | |
009  | | 1  Start cycle-steal status command failed.  Replace the attachment
     | |    card.
     | |
010  | Y N  Is the ROM ok?
     | | |
011  | | 1  ROM checksum is bad.  Replace the attachment feature.
     | |
012  | Y N  Is the RAM ok?
     | | |
013  | | 1  RAM is bad.  Replace the attachment feature.
     | |
014  | 1  Z80 self-test failure.  Replace the attachment feature.
     |
015  Y N  Start cycle-steal status command (7F).  CC=0703?
     | |
016  | Y N  Condition code is not equal to 0704?
     | | |
017  | | 1  Attention interrupt after a start cycle-steal status command.
     | |    Rerun test 5901.  If the same error occurs, replace the attachment
     | |    feature.
     | |
     2 2
     A B
```

A	B	C		
1	1	1		
			018	Y N Condition code is not equal to 0702?
				1 Illogical condition code on the interrupt occurred after start cycle-steal status command. Replace the attachment card.
			020	Y N Is ISB greater than 0F?
				1 Channel status error occurred on the interrupt after the cycle-steal status command. Go to test 5900. If the same error occurs, replace the attachment card.
			022	Y N ISB=80?
				1 Exception interrupt occurred after start cycle-steal status command. Go to test 5900. If same error occurs, replace the attachment card.
			024	Y N ISB=40?
				1 DCB specification check. Go to test 5900. If the same error occurs, replace the attachment card.
			026	1 Delayed command reject occurred on start cycle-steal status command. Go to test 5900. If the same error occurs, replace the attachment card.
			027	Y N Prepare command, level 1, (6000003). CC=7?
				1 Prepare command rejected. Go to test 5900.
			029	Y N Start cycle-steal status command (7F). CC=0703?
				1 Start cycle-steal status command failed. Replace the attachment card.
			031	Y N Prepare command level 3, 60XX0005. CC=7?
				1 Prepare command rejected. Go to test 5900.
			033	Y N Start cycle-steal status command (7F). CC=0703?
				1 Start cycle-steal status command failed. Replace the attachment card.
			035	Y N Prepare command, level 0, 60XX0001. CC=7?
				1 Prepare command rejected. Go to test 5900.
3	3			
A	B			

```
     A B
     2 2
     | |
037  Y N  Start diagnostic 3 command (7C).  CC=0703?
     | |
038  | Y N  ISB=80?
     | | |
039  | | Y N  ISB not equal 40?
     | | | |
040  | | | 1  Delayed command reject on start diagnostic 3.  Go to test 5900.
     | | |
041  | | Y N  ISB not equal to 10?
     | | | |
042  | | | 1  DCB specification check occurred after start diagnostic 3.  Go to
     | | |    test 5900.
     | | |
043  | | 1  CC not 0703 start diagnostic 3.  Go to test 5900.
     | |
044  | Y N  Start cycle-steal status command.  CC=0703?
     | | |
045  | | Y N  CC not equal to 0702?
     | | | |
046  | | | 1  CC=0702 after start cycle-steal status.  Go to test 5900.
     | | |
047  | | Y N  CC not equal 0704?
     | | | |
048  | | | 1  Attention interrupt after start cycle-steal status.  Go to test
     | | |    5900.
     | | |
049  | | 1  CC not equal to 0703 start cycle-steal status.  Go to test 5900.
     | |
050  | Y N  Does status word 1=0100?
     | | |
051  | | 1  Start diagnostic 3 error.  Replace the attachment card.
     | |
052  | 1  CC not equal to 0703 after start diagnostic 3.  Replace the
     |    attachment card.
     |
053  Y N  Start diagnostic 3 command.  CC=0703?
     | |
054  | Y N  ISB not equal to 80?
     | | |
055  | | Y N  ISB not equal to 40?
     | | | |
056  | | | 1  Delayed command reject on start diagnostic 3 command.  Go to test
     | | |    5900.
     | | |
057  | | Y N  ISB not equal 10?
     | | | |
058  | | | 1  DCB specification check occurred after start diagnostic 3
     | | |    command.  Go to test 5900.
     | | |
     4 4 4
     A B C
```

```
     A B C
     3 3 3
     | | |
059  | | 1  CC not equal to 0703 after start diagnostic 3 command.  Go to test
     | |    5900.
     | |
060  | Y N  Start cycle-steal status command.  CC=0703?
     | | |
061  | | Y N  CC not to equal to 0702?
     | | | |
062  | | | 1  CC=0702 after start cycle-steal status command.  Go to test 5900.
     | | |
063  | | Y N  CC not equal to 0704?
     | | | |
064  | | | 1  Attention interrupt after 7F command.  Go to test 5900.
     | | |
065  | | 1  CC not equal to 0703 after 7F command.  Go to test 5900.
     | |
066  | Y N  Does status word 1=0100?
     | | |
067  | | 1  Start diagnostic 3 error.  Replace the attachment feature.
     | |
068  | 1  CC not equal to 0703 after start diagnostic 3.  Replace the
     |    attachment feature card.
     |
069  Y N  Start diagnostic 3 command.  CC=0703?
     | |
070  | 1  Diagnostic wrap test failed.  Replace the attachment card.
     |
071  Y N  Start diagnostic 3 command.  CC=0703?
     | |
072  | 1  Diagnostic wrap test failed.  Replace the attachment card.
     |
073  Y N  Start diagnostic 3 command.  CC=0703?
     | |
074  | 1  CRC self-test failure occurred.  Replace the attachment card.
     |
075  Y N  Start diagnostic 2 command.  CC=0703?
     | |
076  | Y N  CC not equal to 0702?
     | | |
077  | | Y N  Does ISB equal 80?
     | | 1 |  Continue testing at step 82.
     | |   |
078  | |   1  CC=0702 after start diagnostic 2.  Replace the attachment
     | |      feature.
     | |
079  | Y N  CC equal to 0704?
     | | |
080  | 1 |  CC=0704 after start diagnostic 2.  Replace the attachment feature.
     |   |
081  |   1  CC not equal to 0704 after start diagnostic 2.  Replace the
     |      attachment feature.
     |
     A B C
```

```
     A B C
     4 4 4
     | | |
082  | Y N  Start cycle-steal status command.  CC=0703?
     | | |
083  | | 1  CC=0702 after start cycle-steal status.  Replace the attachment
     | |      feature.
     | |
084  | Y N  Does status word 1 equal 0100?
     | | |
085  | | 1  CC=0702 after start diagnostic 2.  Replace the attachment feature.
     | |
086  | 1  Start diagnostic 2 failed.  Replace the attachment feature.
     |
087  1  End of test 5901.  Go to test 5903.
```

SAM 5903 - Tape Unit Test

SAM 5903 analyzes the results of test 5903, the tape unit test.

Test 5903 checks the performance characteristics of the tape unit. The tape unit test writes a 1-Mbyte pattern to the tape, followed by a read/verify operation. The test then checks condition codes for acceptance following each write and read operation. The test compares data after each read operation. Test 5903 is the last automatic test and does not branch to another test.

Test 5903 links from test 5901. SAM 5903 assumes that entry point A of diagnostic test 5903 corresponds to SAM step 001.

SAM 5903 - Tape Unit Test 5903-1

```
001  Y N  Halt I/O command (F0).  CC=7?
     | |
002  | 1  Halt I/O command failed.  Go to IBM MAP 0070.
     |
003  1    Output message: ***** TAPE DIAGNOSTIC *****
     |
004  1    Output message: OPERATOR RESPONSES ARE: F1=READY, F0=ABORT
     |
005  1    Output message: WARNING: THIS TEST WILL DESTROY EXISTING DATA.
     |
006  Y N  Insert the CE cartridge.  Proceed?
     | |
007  | 1  Abort the test.  Go to step 110.
     | |
008  Y N  Issue device reset (6F) command.  CC=7?
     | |
009  | 1  Device reset command failed,  Rerun test 5900.
     | |
010  Y N  Restore command.  CC=0703?
     | |
011  | Y N  Start cycle-steal status command.  CC=0703?
     | | |
012  | | 1  Condition code is not equal to 0703 after start cycle-steal
     | |    status command.  Go to test 5900.
     | |
013  | Y N  Is bit 0 of status word 1 not set?
     | | |
014  | | 1  Tape is not operational.  Replace the tape unit.
     | |
015  | Y N  Is bit 5 of status word 1 not set?
     | | |
016  | | 1  Tape not ready error.  Replace the tape unit.
     | |
017  | Y N  Is bit 6 of status word 1 not set?
     | | |
018  | | 1  Tape ready error.  Replace the tape unit.
     2 2
     A B
```

```
     A B
     1 1
     | |
019  | Y N  Is status word 1 empty?
     | | |
020  | | 1  Error in status word 1.  Replace the attachment card.
     | |
021  | Y N  Start cycle-steal status.  CC=0703?
     | | |
022  | | 1  Condition code is not equal to 0703 after start cycle-steal
     | |    status command.  Go to test 5900.
     | |
023  | Y N  Is bit 1 of status word 2 not set?
     | | |
024  | | 1  Cartridge not in place.  Reseat the cartridge.  Replace the
     | |    tape unit if error persists.
     | |
025  | Y N  Is bit 2 of status word 2 not set?
     | | |
026  | | 1  Drive is not connected/powered on.  Check power and internal
     | |    cabling.  Replace the tape unit.
     | |
027  | Y N  Is bit 9 of status word 2 not set?
     | | |
028  | | 1  Illegal command bit set.  Replace the tape unit.
     | |
029  | Y N  Is the interrupt condition code not 4?
     | | |
030  | | 1  CC=0704 on restore command.  Replace the tape unit.
     | |
031  | 1  CC not 0703 after restore command.  Replace the tape unit.
     |
032  Y N  Write 1 Mbyte 5AA5/FF00 pattern to tape.  CC=0703?
     | |
033  | Y N  CC equal to 0702?
     | | 1  Go to step 62.
     | |
034  | Y N  Start cycle-steal status command.  CC=0703?
     | | |
035  | | 1  Condition code is not equal to 0703 after start cycle-steal status
     | |    command.  Go to test 5900.
     | |
036  | Y N  Is bit 0 of status word 1 not set?
     | | |
037  | | 1  Tape is not operational.  Replace the tape drive unit.
     | |
038  | Y N  Is bit 4 of status word 1 not set?
     | | |
039  | | 1  Parity error during write.  Replace the attachment card.
     | |
040  | Y N  Is bit 6 of status word 1 not set?
     | | |
     3 3 3
     A B C
```

```
     A B C
     2 2 2
     | | |
041  | | 1  Tape ready error.  Replace the tape drive unit.
     | |
042  | Y N  Is bit 15 of status word 1 not set?
     | | |
043  | | 1  Interface data check.  Replace the attachment card.
     | |
044  | Y N  Start cycle-steal status command.  CC=0703?
     | | |
045  | | 1  Condition code is not equal to 0703 after start cycle-steal
     | |    status command.  Go to test 5900.
     | |
046  | Y N  Is bit 0 of status word 2 not set?
     | | |
047  | | Y N  Is bit 1 of status word 2 not set?
     | | | |
048  | | | 1  Cartridge not detected.  Reseat cartridge; replace the tape unit.
     | | |
049  | | Y N  Is bit 2 of status word 2 not set?
     | | | |
050  | | | 1  Drive is not connected/powered on.  Check power, internal
     | | |    cabling.  Replace the tape unit.
     | | |
051  | | Y N  Is bit 3 of status word 2 not set?
     | | | |
052  | | | 1  Cartridge is write protected.  Set write enable or replace
     | | |    the tape unit.
     | | |
053  | | Y N  Is bit 4 of status word 4 not set?
     | | |
054  | | | 1  End of media detected.  Replace the tape drive unit.
     | |
055  | | Y N  Is bit 5 of status word 2 not set?
     | | | |
056  | | | 1  Unrecoverable date error.  Replace the tape unit.
     | | |
057  | | Y N  Is bit 6 of status word 2 not set?
     | | | |
058  | | | 1  Marginal block detected.  Replace the cartridge/tape drive unit.
     | | |
059  | Y N  Is bit 8 of status word 2 not set?
     | | |
060  | | Y N  Is bit 9 of status word 2 not set?
     | | | |
061  | | | 1  Illegal command bit set.  Replace the tape unit.
     | | |
062  | | Y N  Is the interrupt condition code not 0704?
     | | | |
     4 4 4 4
     A B C D
```

```
     A B C D
     3 3 3 3
     | | | |
063  | | | 1  CC=0704 after write command.  Replace the attachment card.
     | | |
064  | 1 1  CC not 0703 after write command.  Replace the tape drive unit.
     |
065  Y N  Write file mark.  CC=0703?
     | |
066  | Y N  CC not 0702?
     | | |
067  | | 1  CC=0702 after write file mark.  Replace the attachment card.
     | |
068  | Y N  CC not 0704?
     | | |
069  | | 1  CC=0704 after write file mark.  Replace the attachment card.
     | |
070  | 1  CC not 0703 after write file mark.  Replace the tape drive unit.
     |
071  Y N  Restore command.  CC=0703?
     | |
072  | 1  CC not 0703 after restore command.  Replace the tape drive unit.
     |
073  Y N  Read and compare 5AA5/FF00 pattern from tape.  CC=0703?
     | |
074  | Y N  CC not 0702?
     | | |
075  | | Y N  Start cycle-steal status.  CC=0703?
     | | | |
076  | | | 1  CC is not equal to 0703 after start cycle-steal status command.
     | | | |  Go to test 5900.
     | | |
077  | | Y N  Is bit 0 of status word 1 not set?
     | | | |
078  | | | 1  Tape is not operational.  Replace tape drive unit.
     | | |
079  | | Y N  Is bit 3 of status word 1 not set?
     | | | |
080  | | | 1  ECC compare error.  Replace the tape drive unit.
     | | |
081  | | Y N  Is bit 4 of status word 1 not set?
     | | | |
082  | | | 1  Parity error on read.  Replace the attachment card.
     | | |
083  | | Y N  Is bit 6 of status word 1 not set?
     | | | |
084  | | | 1  Tape ready error.  Replace the tape drive unit.
     | | |
085  | | Y N  Is bit 15 of status word 1 not set?
     | | | |
     5 5 5 5
     A B C D
```

	A 4	B 4	C 4	D 4	
086				1	Interface data check. Replace the attachment card.
087			Y	N	Start Cycle-Steal Status. CC=0703?
088				1	CC is not equal to 0703 after start cycle-steal status command. Go to test 5900.
089			Y	N	Is bit 0 of status word 2 not set?
090				Y N	Is bit 5 of status word 2 not set?
091				1	Unrecoverable data error. Replace the attachment card.
092				Y N	Is bit 6 of status word 2 not set?
093				1	Margin block detected. Replace the cartridge/tape drive unit.
094				Y N	Is bit 7 of status word 2 not set?
095				1	Go to step 108.
096			Y	N	Is bit 8 of status word 2 not set?
097				Y N	Is bit 9 of status word 2 not set?
098				1	Illegal command bit set. Replace the tape drive unit.
099				Y N	Is bit 10 of status word 2 not set?
100				1	No data detected. Replace the tape drive unit.
101			1	1	CC=0702 after read. Replace the tape drive unit.
102		Y	N		CC not 0704?
103			1		CC=0704 after read. Replace the attachment card.
104		Y	N		CC not 0001?
105			1		Data compare error. Replace the tape drive unit.
106		1			CC not 0703 after Read. Replace the tape drive unit.
107	1				File mark not detected. Replace the attachment card.
108	Y	N			Issue the restore command. CC=0703?
109		1			CC not 0703 after Restore command. Replace the tape drive unit.
110	1				End of test

SAM 5908 - Erase Tape Test

SAM 5908 analyzes the results of test 5908, which verifies operation of the Erase Tape command. The test executes in approximately 2-1/2 minutes.

CAUTION

Because test 5908 erases any data on the cartridge in the tape during test 5908 execution, you must use an appropriate cartridge for the test.

SAM 5908 - Tape Unit Test 5908-1

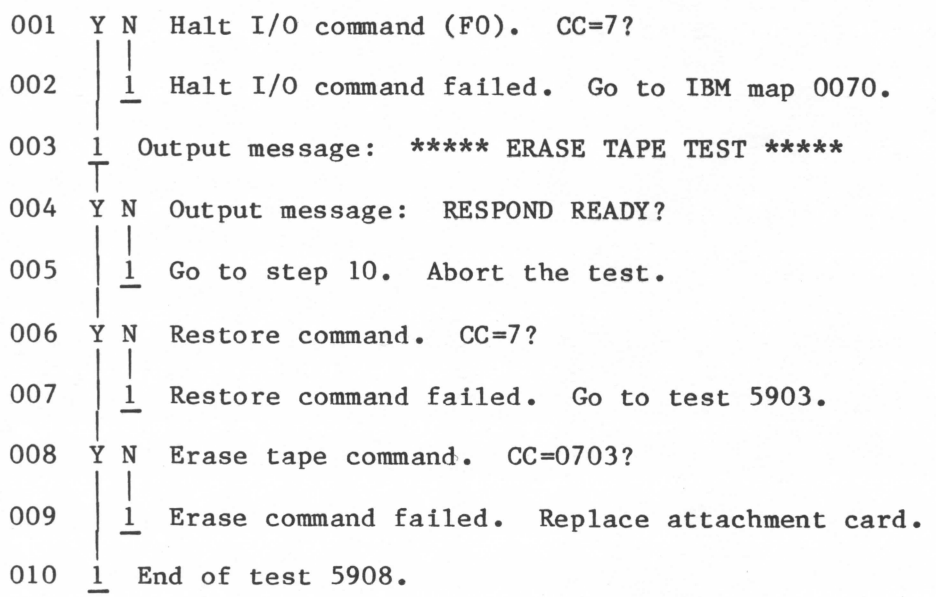

SAM 5909 - Re-tension Tape Test

SAM 5909 analyzes results of test 5909, which verifies the operation of the Retension Tape command. Test 5909 executes in approximately 2-1/2 minutes.

SAM 5909 - Tape Unit Test 5909-1

```
001  Y N  Halt I/O command (F0).  CC=7?
     | |
002  | 1  Halt I/O command failed.  Go to IBM map 0070.
     |
003  1    Output message:  ***** RETENSION TAPE TEST *****
     |
004  Y N  Output message:  RESPOND READY?
     | |
005  | 1  Go to step 10.  Abort test.
     |
006  Y N  Restore command.  CC=7?
     | |
007  | 1  Restore command failed.  Go to test 5903.
     |
008  Y N  Re-tension tape command.  CC=0703?
     | |
009  | 1  Re-tension command failed.  Replace attachment card.
     |
010  1    End of test 5909.
```

NOTE

Before performing the troubleshooting procedures contained in table 6-3, check the tape cartridge drive and associated system components for obvious problems. Make sure to check cables, connectors, host system, and power tolerances.

TABLE 6-3. TAPE STORAGE SUBSYSTEM TROUBLESHOOTING

Symptom	Probable Cause	Remedy
1. The drive will not read tapes written on other tape cartridge drives.	a. The head is improperly aligned. b. The azimuth is out of adjustment. c. The drive motor is faulty.	a. Replace the drive unit. b. Replace the drive unit. c. Replace the drive unit.
2. An excessive number of read errors has occurred.	a. The storage media is defective. b. The head is dirty. c. The drive motor is faulty.	a. Replace the tape cartridge. b. Clean the head. c. Replace the drive unit.
3. The drive does not respond to formatter commands.	a. The subsystem is installed incorrectly. b. The drive unit is defective. c. The attachment feature is defective. d. The interface cables or power supply are defective.	a. Verify that the subsystem installed properly (section 3). b. Replace the drive unit. c. Replace the attachment feature. d. Replace the interface cables or the power supply.
4. The head resets, but the tape will not move on command.	a. The drive unit is defective. b. The attachment feature feature is defective.	a. Replace the drive unit. b. Replace the attachment feature.
5. The drive unit overheats.	a. The power supply is defective. b. The fan is defective.	a. Replace the power supply assembly. b. Replace the fan assembly.
6. The drive unit does not power up.	a. The subsystem is installed incorrectly. b. The tape cartridge drive 2-Amp fuse is blown. c. The tape cartridge drive is defective.	a. Verify the subsystem installation (section 3). b. Replace the fuse. c. Remove and replace the tape cartridge drive.

FRU REMOVAL AND REPLACEMENT

Once the self-test diagnostics and/or the procedures contained in the trouble-shooting table have isolated a tape storage subsystem fault to a field-replaceable unit (FRU), remove and replace the defective modules as described in the following paragraphs. Note that the FRU-level removal and replacement instructions assume the maintenance person is standing in front of the tape cartridge drive enclosure and looking down into the unit as shown in figure 6-3.

WARNING

Do not attempt to remove the tape cartridge drive enclosure from the Series/1 cabinet or FRUs from the tape cartridge drive enclosure with power applied to the Series/1. Failure to observe this caution can result in personal injury and/or damage to the equipment.

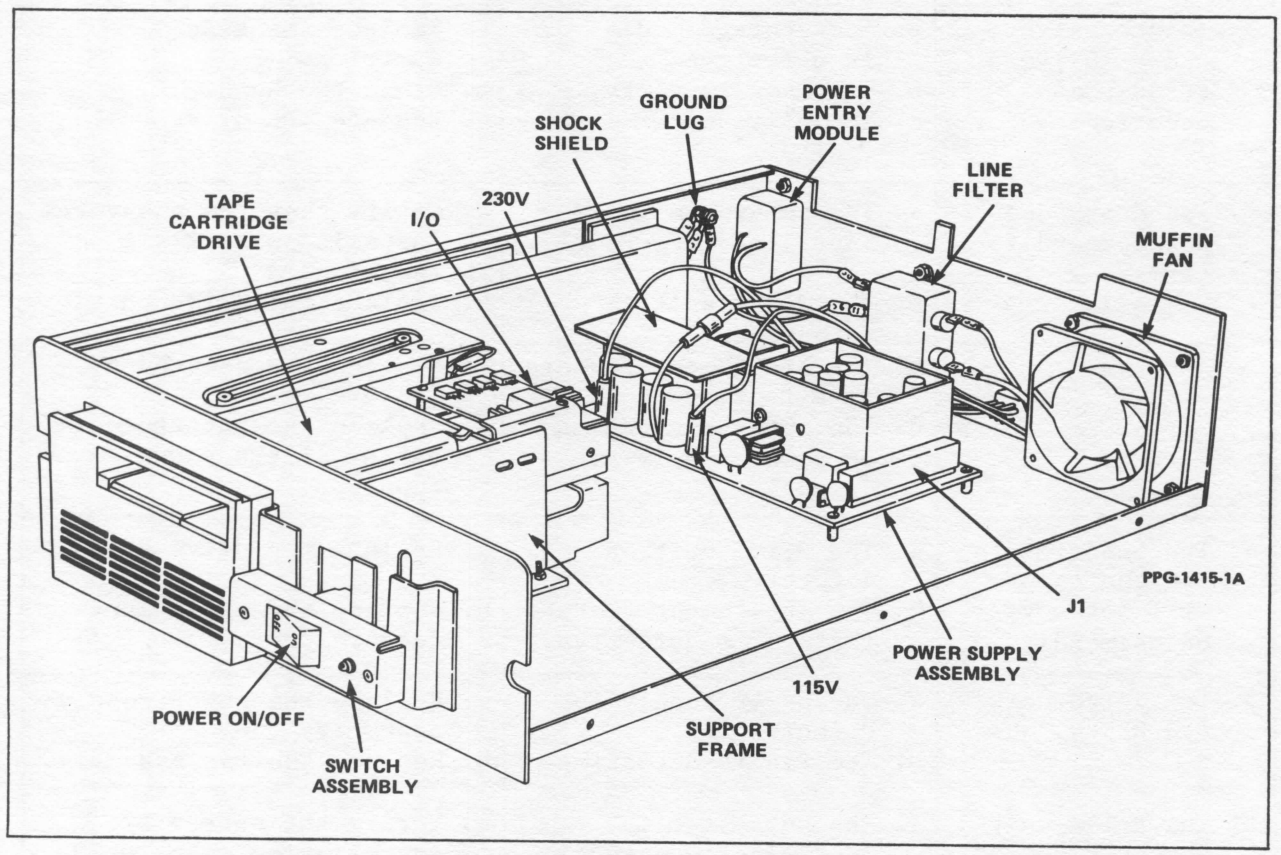

Figure 6-3. Tape Cartridge Drive Enclosure FRU Locations

TAPE CARTRIDGE DRIVE/FORMATTER AND INTERFACE CABLE ASSEMBLY REMOVAL AND REPLACEMENT

The following paragraphs describe removal and replacement of the tape cartridge drive/formatter and/or interface cable assembly.

Tape Cartridge Drive/Formatter and Interface Cable Assembly Removal

For removal, complete the following steps:

1. Turn off power to the tape cartridge drive.
2. Verify that the Series/1 is powered down.
3. Open the rear access door on the Series/1 cabinet to gain access to the rear of the tape cartridge drive.
4. Disconnect the tape cartridge drive ac power cord from the designated Series/1 outlet and from the power receptacle located on the rear chassis of the drive.
5. Disconnect the I/O interface cable that connects the tape cartridge drive to the tape storage subsystem attachment feature.
6. Remove the snap-on front panel from the Series/1 cabinet.
7. If installed, remove the 1/4-inch wide filler panel located just to the left of the tape cartridge drive.
8. Remove and save the two machine screws that secure the tape cartridge drive to the mounting shelf.
9. Remove the tape cartridge drive from the Series/1 cabinet.

Tape Cartridge Drive/Formatter and Interface Cable Assembly Replacement

To replace the formatter and cable assembly, complete the following steps:

1. If installing another tape cartridge drive in the Series/1 now, install the unit following the tape cartridge drive installation instructions provided in section 3 of this manual.
2. If you are not installing another tape cartridge drive now, either remove the mounting shelf and install the protective panel or simply reattach the decorative snap-on front panel.

ATTACHMENT FEATURE CARD REMOVAL AND REPLACEMENT

Remove and replace the attachment feature card as follows:

CAUTION

Do not attempt to remove the attachment card from the Series/1 cabinet with power applied to the Series/1. Failure to observe this caution can result in damage to the attachment feature.

1. Turn off power to the tape cartridge drive.
2. Verify that the Series/1 is powered down.
3. Remove the snap-on cover from the front of the processor unit or I/O expansion unit, as applicable.
4. Disconnect the I/O interface cable that connects the tape cartridge drive to the tape storage subsystem attachment feature.
5. Once you have removed the tape storage subsystem interface cable, grasp both ends of the card handle and lift the card straight up and out of the card chassis.

NOTE

This concludes the procedure for removing the attachment card. If installing a new card, follow the card installation instructions contained in the Installation section of this manual.

TAPE CARTRIDGE DRIVE ENCLOSURE TOP COVER

The following paragraphs describe the removal and replacement of the tape cartridge drive enclosure top cover.

Tape Cartridge Drive Enclosure Top Cover Removal

Remove the tape cartridge drive enclosure top cover as follows:

1. Remove tape cartridge drive enclosure from Series/1 cabinet as described in steps 1 through 9 of the Tape Cartridge Drive/Formatter and Interface Cable Assembly Removal procedure.
2. Obtain the set of screwdrivers, Hexdriver, open-end wrench, and small needlenose pliers, as listed in table 6-1.
3. Remove the five machine screws used to attach the top cover to the enclosure (see figure 6-4). Save these screws.
4. Remove the top cover from the tape cartridge drive by lifting the side cover up and out.

Tape Cartridge Drive Enclosure Top Cover Replacement

Replace the tape cartridge drive enclosure top cover as follows:

1. Reinstall the top cover on the tape cartridge drive by sliding the cover onto the tape cartridge drive enclosure.

2. Secure the top cover to the tape cartridge drive enclosure with the five machine screws previously removed.

3. Reinstall the tape cartridge drive enclosure in the Series/1 cabinet as described in steps 1 and 2 of the Tape Cartridge Drive/Formatter and Interface Cable Assembly Replacement procedure.

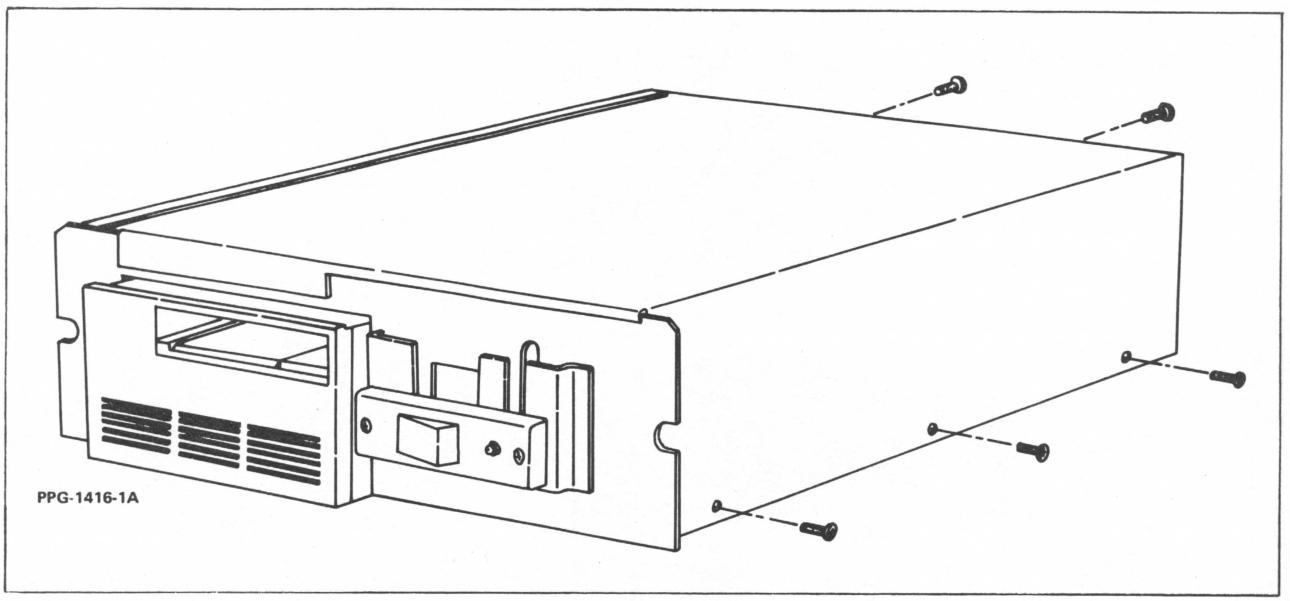

Figure 6-4. Removal of Tape Cartridge Drive Enclosure Top Cover (Sheet 1 of 2)

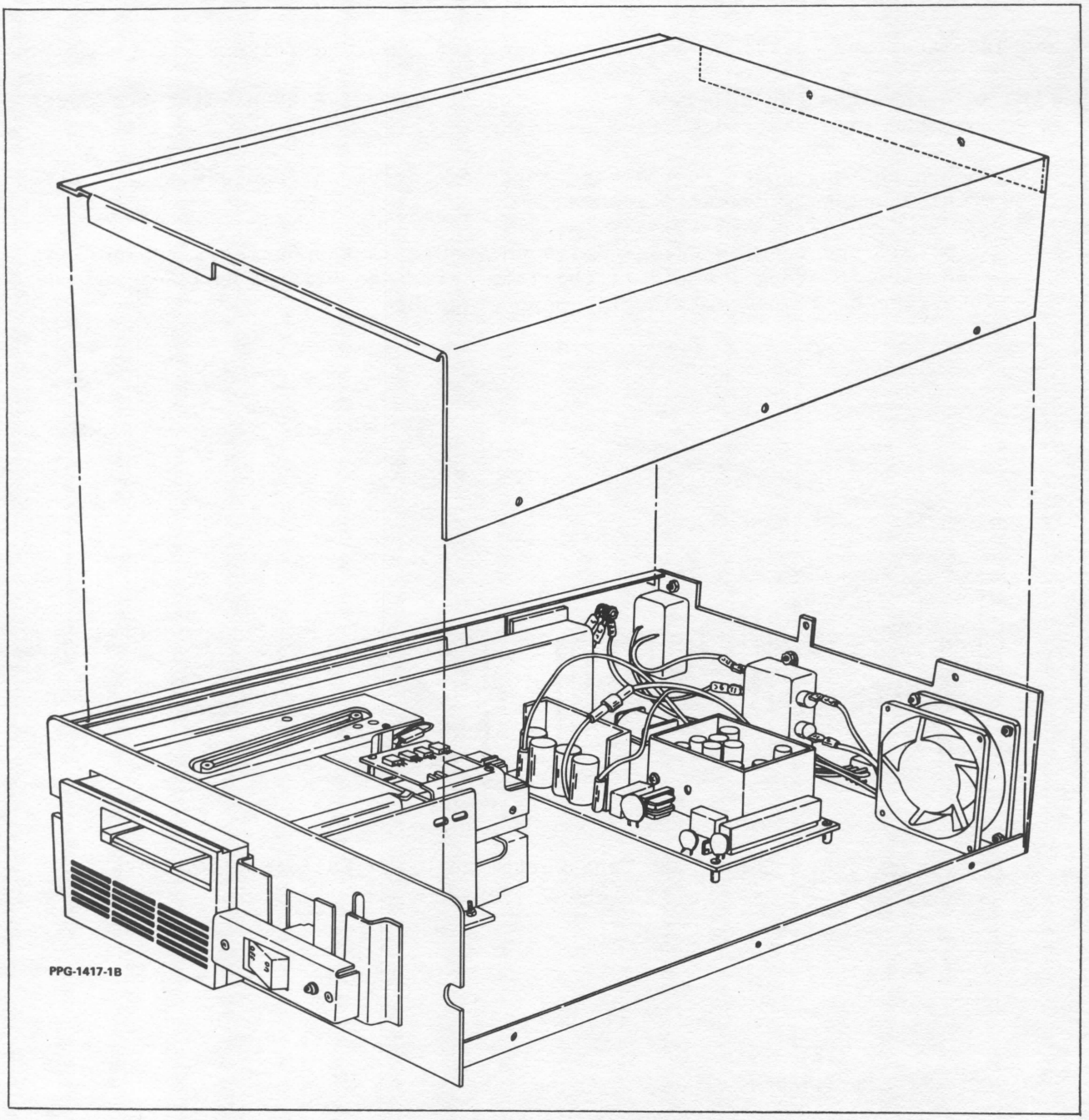

Figure 6-4. Removal of Tape Cartridge Drive Enclosure Top Cover
(Sheet 2 of 2)

TAPE CARTRIDGE DRIVE

The following paragaraphs describe the removal and replacement of the tape cartridge drive.

Tape Cartridge Drive Removal

Remove the tape cartridge drive as follows:

1. Remove the tape cartridge drive enclosure from the Series/1 cabinet as described in steps 1 through 9 of the Tape Cartridge Drive/Formatter and Interface Cable Assembly Removal procedure.

NOTE

Ensure the tape cartridge drive heads are in the fully locked position. Refer to the Installation section of this manual for the procedure.

2. Remove the cover from the tape cartridge drive enclosure as described in steps 1 through 4 of the Tape Cartridge Drive Enclosure Top Cover Removal procedure.

3. Disconnect the two plastic connectors used to connect the tape cartridge drive to the power supply assembly (see figure 6-5).

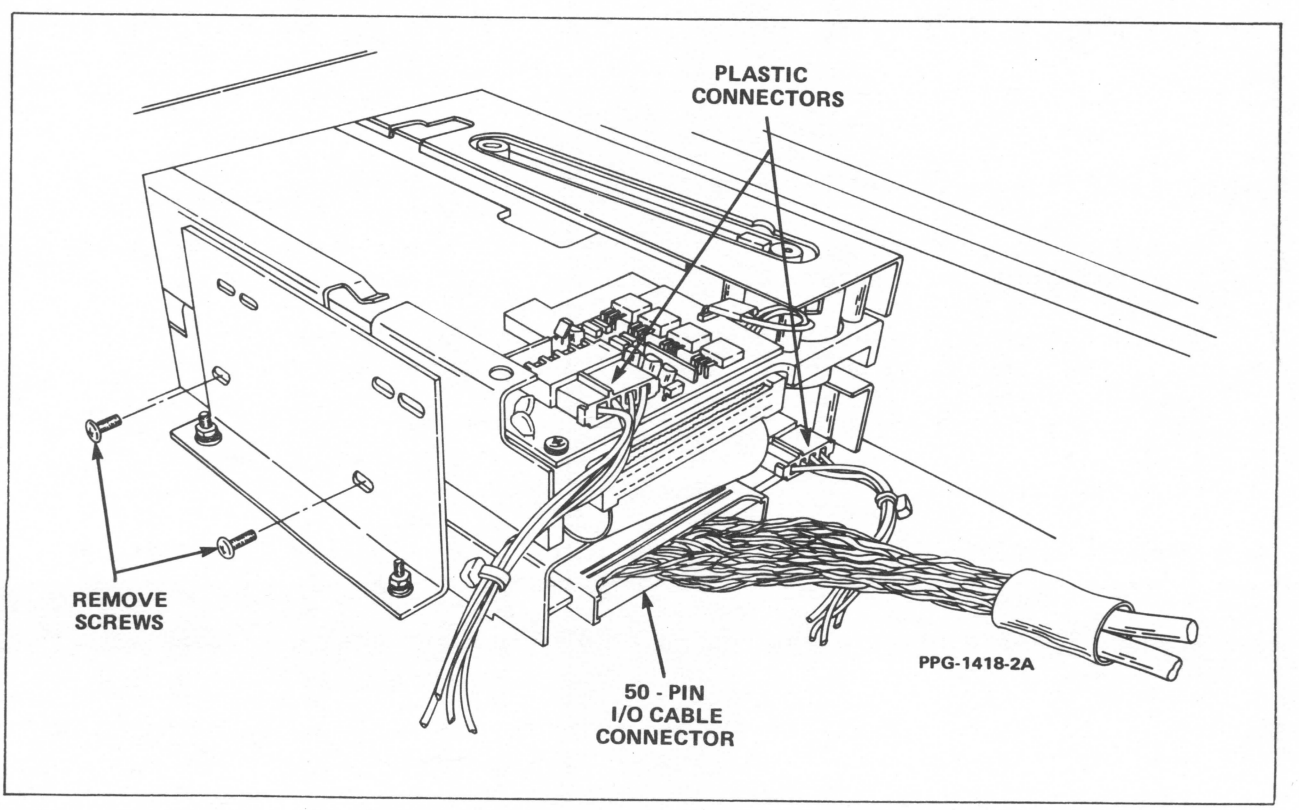

Figure 6-5. Tape Cartridge Drive Cable Connections and Support Frame

4. Disconnect the 50-pin I/O cable connector from the rear of the tape cartridge drive (see figure 6-5).

5. Remove and save the two screws attaching the support frame to the right side of the tape cartridge drive. Use the 1/4-inch hexdriver to remove the screws (see figure 6-5).

6. Remove and save the two screws attaching the tape cartridge drive to the left side frame of the enclosure (see figure 6-6). Use the 1/4-inch hexdriver to remove the screws. Gain access to these two screws from the left side panel of the enclosure.

7. Lift the tape cartridge drive straight up and out of the enclosure.

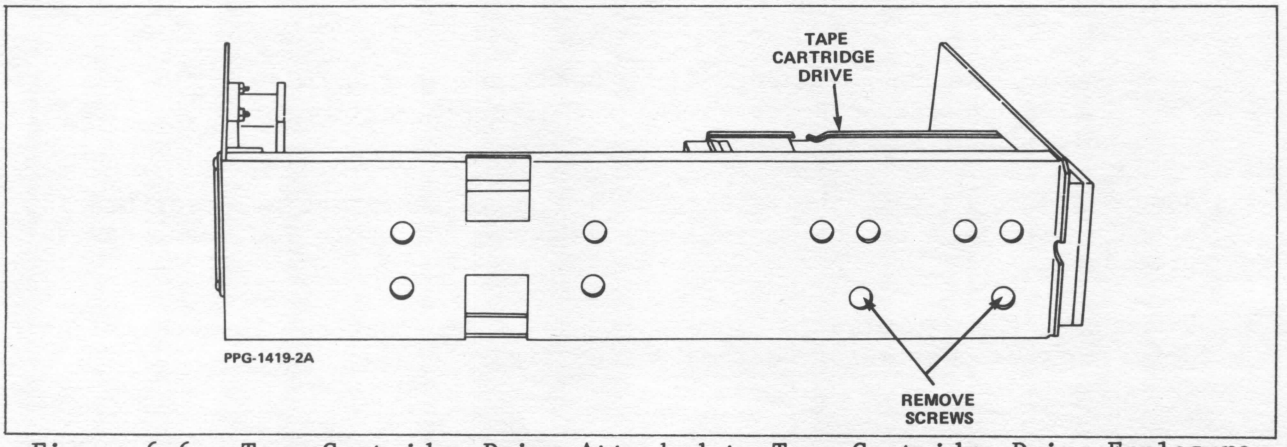

Figure 6-6. Tape Cartridge Drive Attached to Tape Cartridge Drive Enclosure

Tape Cartridge Drive Replacement

Replace the tape cartridge drive as follows:

1. Position the replacement tape cartridge drive into the enclosure so the tape cartridge slot faces up.

2. Reattach the left side of the tape cartridge drive to the left side panel of the enclosure. Secure the drive with the two screws previously removed, using the 1/4-inch hexdriver.

3. Reinstall the two screws used to secure the right side of the tape cartridge drive to the support frame.

4. Connect the 50-pin I/O cable connector to the rear of the tape cartridge drive.

5. Connect the two plastic connectors used to connect the power supply to the tape cartridge drive.

6. Reinstall the tape cartridge drive enclosure top cover as described in the Tape Cartridge Drive Enclosure Top Cover Replacement procedure.

7. Reinstall the tape cartridge drive enclosure in the Series/1 cabinet as described in the Tape Cartridge Drive/Formatter and Interface Cable Assembly Replacement procedure.

POWER SUPPLY ASSEMBLY

The following paragraphs describe removal and replacement of the power supply assembly.

Power Supply Assembly Removal

Remove the power supply assembly as follows:

1. Remove the tape cartridge drive enclosure from the Series/1 cabinct as described in steps 1 through 9 of the Tape Cartridge Drive/Formatter and Interface Cable Assembly Removal procedure.

NOTE

Ensure the tape cartridge drive heads are in the fully locked position. Refer to the Installation section of this manual for the procedure.

2. Remove the top cover from the tape cartridge drive enclosure as described in steps 1 through 4 of the Tape Cartridge Drive Enclosure Top Cover Removal procedure.

NOTE

Refer to figure 6-7 when performing the following steps.

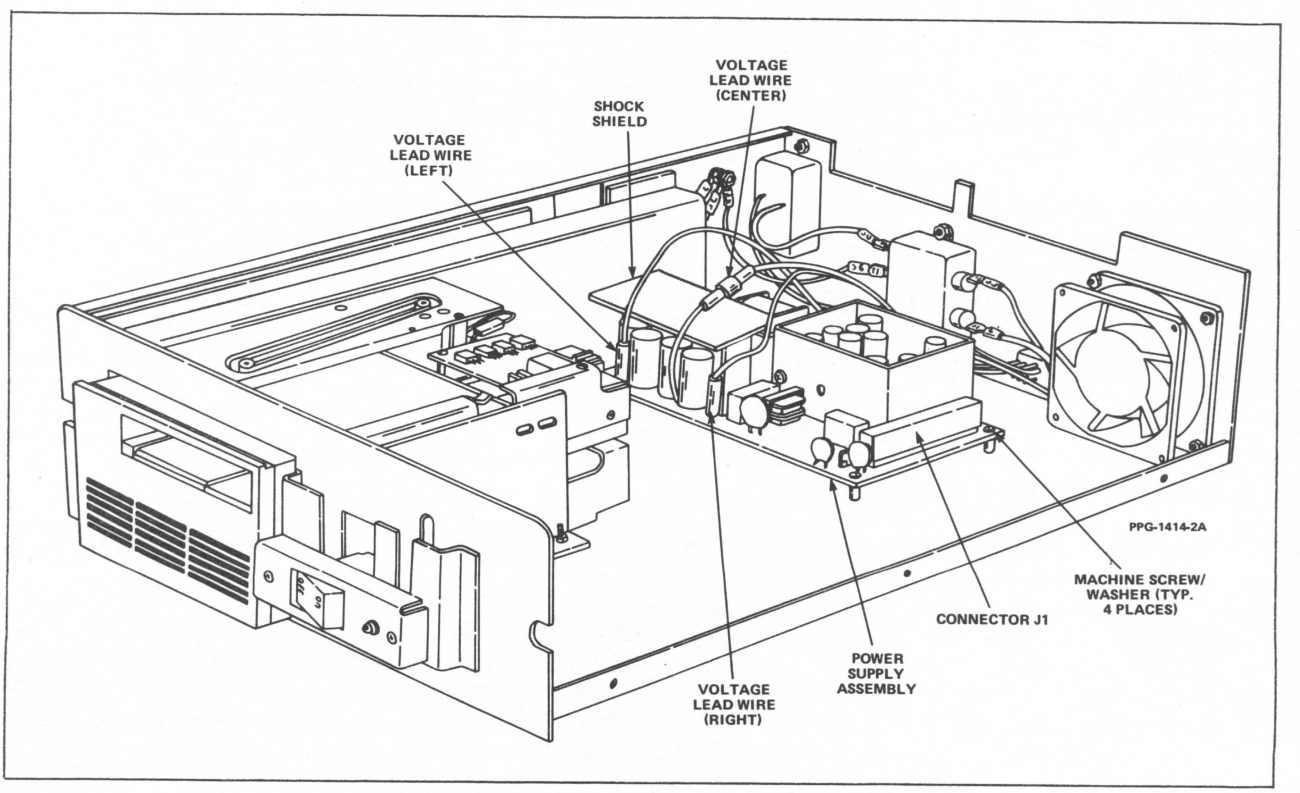

Figure 6-7. Tape Cartridge Drive Power Supply Assembly

3. Disconnect plastic connector J1 from the mating connector (locate the connector on the right side of the power supply).

4. Disconnect the right voltage select lead wire and connector from the power supply. Use a piece of tape to label the wire as the 115-Vac wire lead.

5. Disconnect the left voltage select lead wire and connector from the power supply. Use a piece of tape to label the wire as the 230-Vac wire lead.

6. Disconnect the center voltage select lead wire from the power supply.

7. Remove and retain the four machine screws and washers securing the power supply to the base of the enclosure.

8. Lift the power supply carefully straight up from the chassis.

9. If you are returning the power supply for repair, remove the plastic shock shield that is attached to the heat sink by two metal clips. Retain this shock shield and the clips for reinstallation on the new power supply.

CAUTION

Be careful not to damage the I/O cable when removing the power supply from the chassis.

Power Supply Assembly Replacement

Replace the power supply as follows:

1. Align the four screw holes on the power supply with the standoffs on the enclosure base. Position the power supply so that connector J1 is on the right side.

2. Reattach the four machine screws and washers securing the power supply to the base of the enclosure.

3. Reattach the center voltage select lead wire to the power supply.

4. Reattach the left voltage select lead wire (230-Vac lead) and connector to the power supply.

5. Reattach the right voltage select lead wire (115-Vac lead) and connector to the power supply.

6. Reattach the plastic connector J1 to the mating connector on the right side of the power supply.

7. Reinstall the tape cartridge drive enclosure top cover as described in the Tape Cartridge Drive Enclosure Top Cover Replacement procedure.

8. Reattach the plastic shock shield to the power supply heat sink using the two metal clips removed in step 9 of the Power Supply Assembly Removal procedure.

9. Reinstall the tape cartridge drive enclosure in the Series/1 cabinet as described in the Tape Cartridge Drive/Formatter and Interface Cable Assembly Replacement procedure.

FAN

The following paragraphs describe fan removal and replacement.

Fan Removal

Remove the fan as follows:

1. Remove the tape cartridge drive enclosure from the Series/1 cabinet as described in steps 1 through 9 of the Tape Cartridge Drive/Formatter and Interface Cable Assembly Removal procedure.

NOTE

Ensure the tape cartridge drive heads are in the fully locked position. Refer to the installation section of this manual for the procedure.

2. Remove the top cover from the tape cartridge drive enclosure as described in steps 1 through 4 of the Tape Cartrdige Drive Enclosure Top Cover Removal procedure.

NOTE

Refer to figure 6-8 when performing the following steps.

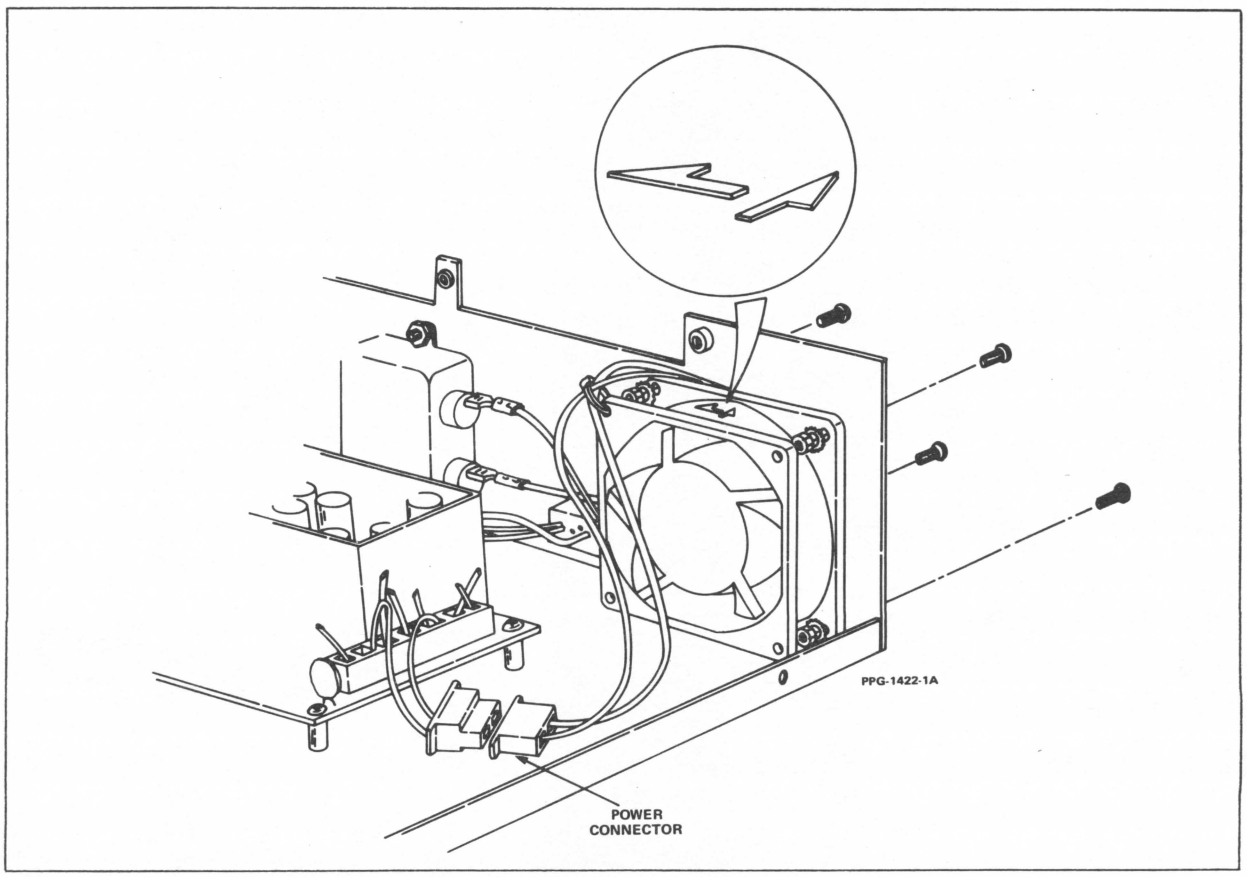

Figure 6-8. Tape Cartridge Drive Enclosure Fan Assembly

3. Disconnect the two-lead plastic power connector from the fan assembly. Locate this connector midway between the power supply and the fan.

NOTE

Observe the top of the fan and note the direction of the two arrows. These arrows indicate the direction of the air flow. During reinstallation of the new fan, you must orient the arrows in the same manner.

4. Remove and retain the four mounting screws, nuts, and washers used to attach the fan to the rear chassis of the enclosure.

NOTE

You may need a 5/16-inch open end wrench to hold the nuts while loosening the screws.

5. Remove the fan from the chassis.

Fan Replacement

Replace the fan as follows:

1. Replace the fan by aligning the fan according to the direction of the arrows on top of the fan as noted during removal. The rightmost arrow must point to the rear of the chassis.

2. Secure the fan to the chassis with the four mounting screws, nuts, and washers that you previously removed. Use the 5/16-inch open-end wrench to hold the nuts, if necessary.

3. Reconnect the two-lead plastic power connector to the fan assembly.

4. Reinstall the tape cartridge drive enclosure top cover as described in the Tape Cartridge Drive Enclosure Top Cover Replacement procedure.

5. Reinstall the tape cartridge drive enclosure in the Series/1 cabinet as described in the Tape Cartridge Drive/Formatter and Interface Cable Assembly Replacement procedure.

POWER ENTRY MODULE

The following paragraphs describe removal and replacement of the power entry module.

Power Entry Module Removal

Remove the power entry module as follows:

1. Remove the tape cartridge drive enclosure from the Series/1 cabinet as described in steps 1 through 9 of the Tape Cartridge Drive/Formatter and Interface Cable Assembly Removal procedure.

NOTE

Ensure the tape cartridge drive heads are in the fully locked position. Refer to the installation section of this manual for the procedure.

2. Remove the top cover from the tape cartridge drive enclosure as described in steps 1 through 4 of the Tape Cartridge Drive Enclosure Top Cover Removal procedure.

NOTE

Refer to figure 6-9 when performing the following steps.

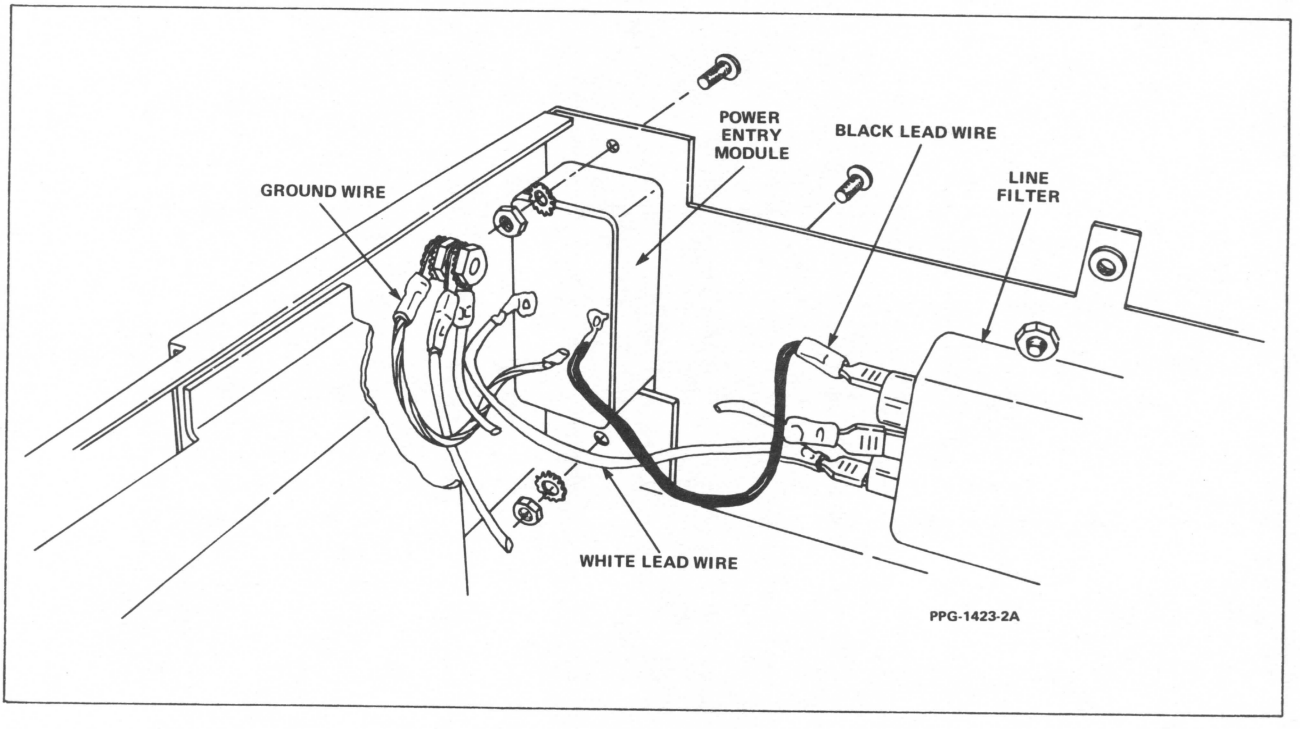

Figure 6-9. Tape Cartridge Drive Enclosure Power Entry Module

3. Remove the two nuts securing the green- and yellow-striped terminal ground wire to the chassis ground stud located at the left rear side panel. Remove the ground wire.

4. Disconnect the black lead wire and connector running from the right side of the power entry module to the upper left side of the line filter. Disconnect the wire/connector at the line filter.

5. Disconnect the white lead wire and connector running from the left side of the power entry module to the bottom left side of the line filter. Disconnect the wire/connector at the line filter.

6. Remove and save the two screws, nuts, and washers securing the power entry module to the rear of the tape cartridge drive enclosure.

7. Remove the power entry module from the chassis.

Power Entry Module Replacement

Replace the power entry module as follows:

1. Realign the new power entry module in the chassis. Secure the power entry module to the left rear of the tape cartridge drive chassis with the two screws, nuts, and washers that you previously removed.

2. Reconnect the white lead wire and connector to the bottom left side of the line filter.

3. Reconnect the black lead wire and connector to the upper left side of the line filter.

4. Reattach the green- and yellow-striped ground wire to the chassis ground stud located at the left rear side of the enclosure.

NOTE

Verify that the voltage select switch mounted on the outside rear panel of the enclosure is set to the correct voltage for your site. Only two selections (115 V and 220 V) are available. Once selected, the voltage indicator (115 V or 220 V) should be visible.

5. Reinstall the tape cartridge drive enclosure top cover as described in the Tape Cartridge Drive Enclosure Top Cover Replacement procedure.

6. Reinstall the tape cartridge drive enclosure in the Series/1 cabinet as described in the Tape Cartridge Drive/Formatter and Interface Cable Assembly Replacement procedure.

LINE FILTER

The following paragraphs describe removal and replacement of the line filter.

Line Filter Removal

Remove the line filter as follows:

1. Remove the tape cartridge drive enclosure from the Series/1 cabinet as described in steps 1 through 9 of the Tape Cartridge Drive/Formatter and Interface Cable Assembly Removal procedure.

NOTE

Ensure the tape cartridge drive heads are in the fully locked position. Refer to the installation section of this manual for the procedure.

2. Remove the top cover from the tape cartridge drive enclosure as described in steps 1 through 4 of the Tape Cartridge Drive Enclosure Top Cover Removal procedure.

NOTE

Refer to figures 6-9 and 6-10 when performing the following steps.

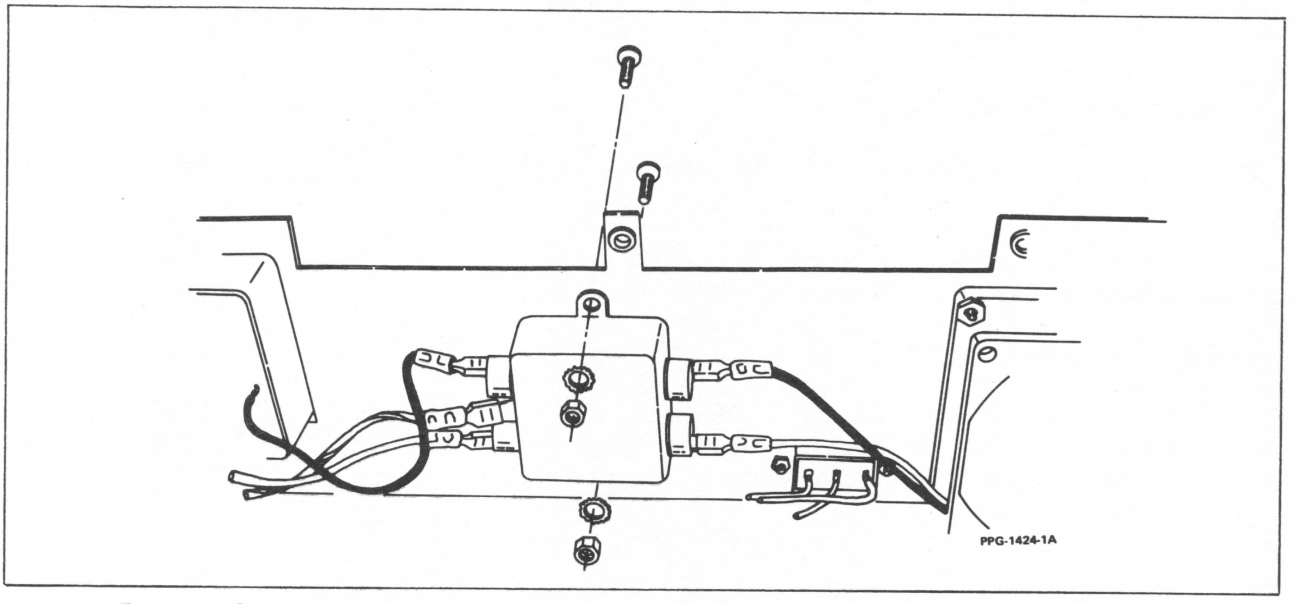

Figure 6-10. Tape Cartridge Drive Enclosure Line Filter Assembly

3. Remove and save the two screws, washers, and nuts securing the line filter to the rear of the chassis.

4. Disconnect the five connectors with lead wires from the line filter as follows:

   a. Disconnect the upper black and lower white connectors and lead wires from the right side of the line filter.

   b. Disconnect the upper black, middle green/yellow stripe, and lower white connectors and lead wires from the left side of the line filter.

5. Remove the line filter from the chassis.

Line Filter Replacement

Replace in line filter as follows:

1. Reattach the five connectors with lead wires to the line filter as follows:

   a. Reconnect the upper black, middle green/yellow stripe, and lower white connectors and lead wires to the left side of the line filter.

   b. Reconnect the upper black and lower white connectors and lead wires to the right side of the line filter.

2. Reattach the line filter to the rear of the tape cartridge drive chassis using the two screws, washers, and nuts.

3. Reinstall the tape cartridge drive enclosure cover as described in the Tape Cartridge Drive Enclosure Top Cover Replacement procedure.

4. Reinstall the tape cartridge drive enclosure in the Series/1 cabinet as described in the Tape Cartridge Drive/Formatter and Interface Cable Assembly Replacement procedure.

POWER SWITCH ASSEMBLY

The following paragraphs describe removal and replacement of the power switch assembly.

Power Switch Assembly Removal

Remove the power switch assembly as follows:

1. Remove the tape cartridge drive enclosure from the Series/1 cabinet as described in steps 1 through 9 of the Tape Cartridge Drive/Formatter and Interface Cable Assembly Removal procedure.

NOTE

Ensure the tape cartridge drive heads are in the fully locked position. Refer to the installation section of this manual for the procedure.

2. Remove the top cover from the tape cartridge drive enclosure as described in steps 1 through 4 of the Tape Cartridge Drive Enclosure Top Cover Removal procedure.

NOTE

Refer to figure 6-11 through 6-13 when performing the following steps.

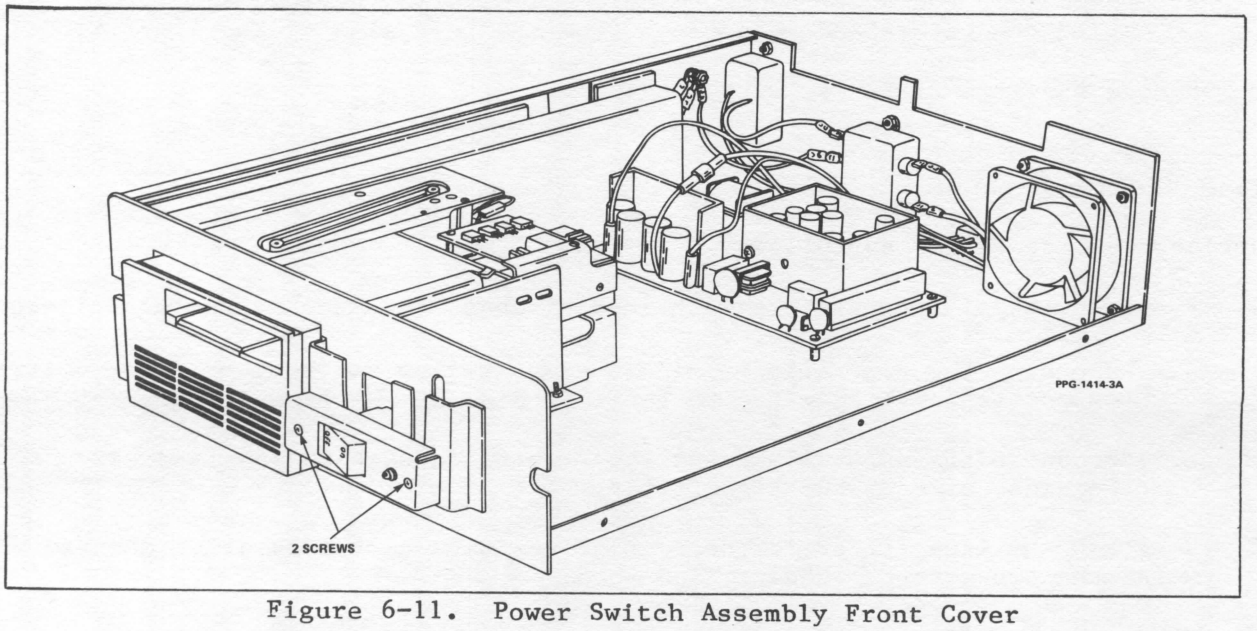

Figure 6-11. Power Switch Assembly Front Cover

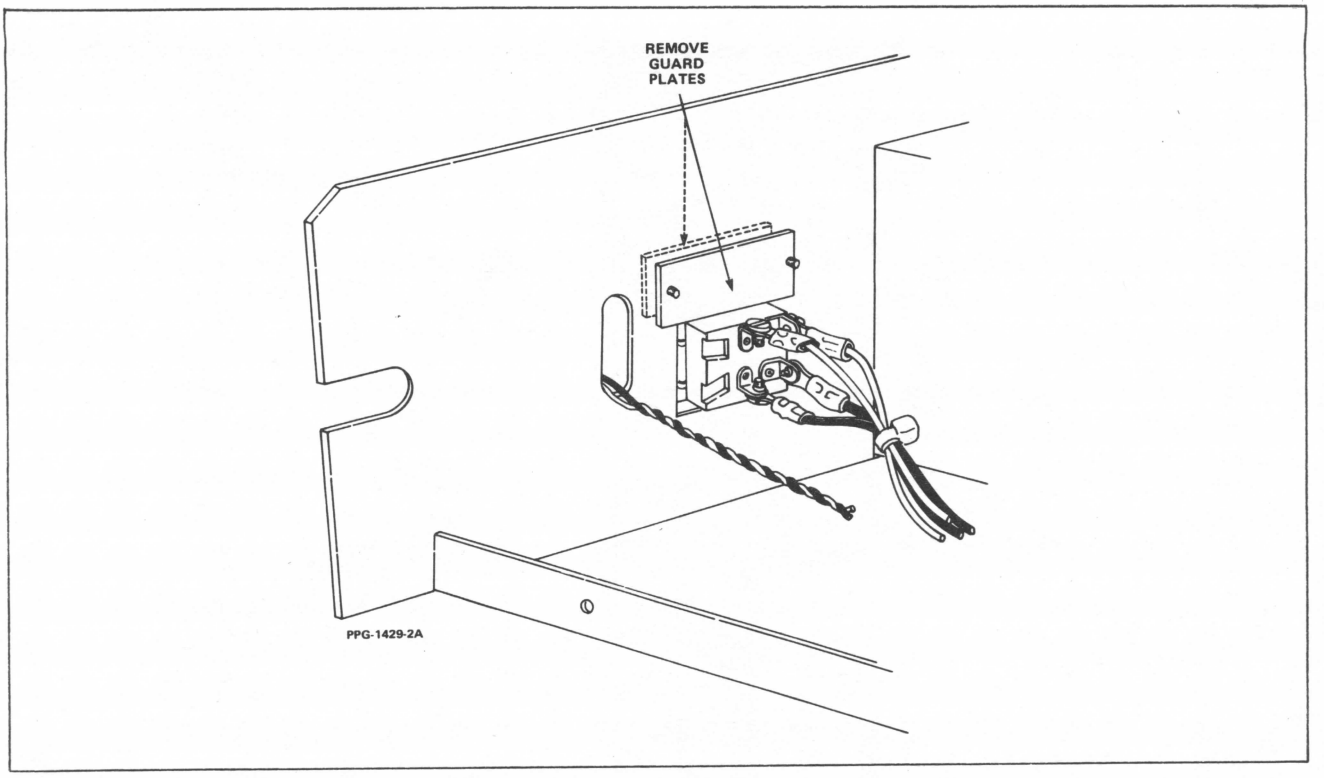

Figure 6-12. Power Switch Assembly Guard Plates

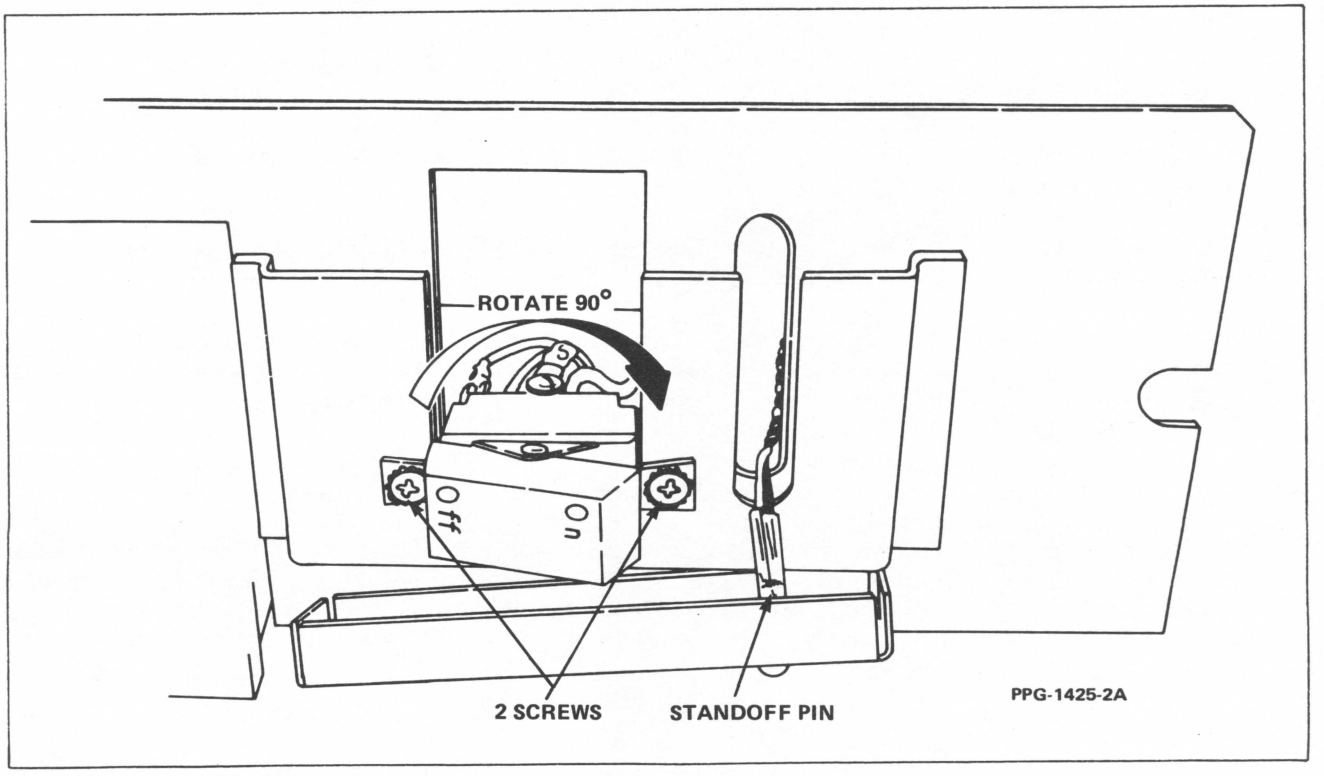

Figure 6-13. Power Switch Assembly On/Off Switch

3. Remove and save the two screws securing the switch assembly front cover to the front chassis of the tape cartridge drive.

4. Pull the switch assembly front cover carefully out enough to expose the two lead wire (red and black) connectors. Gently disconnect the lead wires/connectors located on the plastic standoffs on the inside of the front cover.

5. Observe the location of the four lead wires (two black, two white) running to the power ON/OFF switch. Note that the two black wires share a common side, while the two white wires share a common side.

6. Remove the two screws securing the metal finger guards to the switch assembly.

7. Remove the two screws securing the power ON/OFF switch to the front cover.

8. Rotate the switch 90° and push the switch through the mounting slot.

9. Remove one screw and lead wire from the switch and then immediately reattach the screw and lead wire to the same location on the new power ON/OFF switch.

10. Repeat step 9 until you have attached all four screws and lead wires to the new power ON/OFF switch.

Power Switch Assembly Replacement

Replace the power switch assembly as follows:

1. Rotate the power ON/OFF switch 90° and push the switch back through the front panel mounting slot.

2. Reattach the power ON/OFF switch to the front cover, using the two screws that you previously removed.

3. Reattach the metal finger guards to the switch assembly using the two screws that you previously removed.

4. Reconnect the red and black lead wires to the plastic standoffs on the inside of the chassis cover. Ensure the red lead wire connects to the taller of the two standoff pins, while the black lead wire connects to the shorter standoff pin.

5. Reattach the power switch assembly front cover to the tape cartridge drive chassis using the two screws that you previously removed.

6. Reinstall the tape cartridge drive enclosure top cover as described in the Tape Cartridge Drive Enclosure Top Cover Replacement procedure.

7. Reinstall the tape cartridge drive enclosure in the Series/1 cabinet as described in the Tape Cartridge Drive/Formatter and Interface Cable Assembly Replacement procedure.

RETURNING DEFECTIVE MODULES

Return all defective FRUs to the factory for repair.

DIAGNOSTICS

The remainder of this section provides information on using the IBM diagnostic monitor. Topics discussed include configurator table information, the common halt list, and commands.

CONFIGURATOR TABLE INFORMATION

NOTE

The following conventions are used for operator/programmer panel input:

(B) = Data Buffer switch
(I) = Console Interrupt switch

Changing Configurator Table Using Operator/Programmer Panel

To change the configurator table using the operator/programmer panel, perform the following steps:

1. Press the Load switch to load the configurator program. If a 3801 error occurs, enter the following to continue to the next step:

   (B), 6, (I), (I)

2. View and record the configurator table contents per the following steps:

   a. Press the Stop switch.

   b. Press the SAR (storage address register) switch.

   c. Enter 3000 via data register input switches.

   d. Press the Store switch.

   e. Press the Main Storage switch to display the first word of entry 00 in the configurator table. Record the contents.

f. Continue pressing the Main Storage switch to view and record each word of entry.

NOTE

Each configurator table entry consists of eight words. Refer to following paragraphs for entry format. Entry 00 is the system entry and entries 01 through XX are the device entries. The last entry in the table contains a 1 bit in the bit 2 position of byte 0203 as follows:

```
      02              03
/---|----/     /---|----/
    |               |
0010  0000      0000  0000
```

g. Continue logging information from the configurator table until complete.

3. Press the Load switch. Either a 382A (secure customer interface), a 3822 (configurator errors on system), or a 382E (option table available for entry) halt occurs. A 3801 halt appears if the diskette is configured for an alternate console that is not present.

   Enter the following to continue:

   (B),6,(I),(I)

   a. If a 382A halt code occurs, enter the following to advance to halt 3822 or 382E:

      (B),6,(I),(I)

   b. If a 3822 halt code occurs, enter the following to advance to halt 382E:

      (B),1F,(I),(B),0300,(I),(I)

   c. If a 382E halt code occurs, go to step 4.

4. Enter one of the following options, as applicable:

   a. To delete the entry from the configurator table, enter:

      (B),1F,(I),(B),0200,(I),(I)

   b. To change any portion of an entry in the configurator table, enter:

      (B),1F,(I),(B),0300(I),(I)

   c. To add a new entry in configurator table, enter:

      (B),1F,(I),(B),0A00,(I),(I)

5. If a 383A halt code occurs (signifying that an 02 or 03 option was selected), enter the table number as follows:

   (B),1F,(I),(B),XX00,(I),(I)

   Where:

   XX = entry number

6. If a 383B or 3846 halt code occurs (signifying that an 03 or 0A option was selected), enter new configurator table data for table entries 01 through XX as follows:

   (B),8F,(I),(B),AATT,(I),(B),0000,(I),(B),IDID,(I),(B),0000,
   (I),(B),0000,(I),(B),0000,(I),(B),0000,(I),(B),IDID,(I),(I),

   Where:

   AA = device address
   TT = device type
   IDID = device read ID

7. Repeat steps 4 through 6 until all additions, deletions, and corrections are completed.

8. Write new configurator table on diskette. When completed (halt code 382E), enter:

   (B),1F,(I),(B),0D00,(I),(I)

9. The next halt code is a 382C (copy table to another diskette?). To terminate the program, enter:

   (B),1F,(I),(B),0500,(I),(I)

10. A 3800 (ready) halt code indicates successful termination of the configurator program.

11. The diskette is now configured and ready for diagnostic checkout.

Configure System (Option OC) Using Operator/Programmer Panel

To configure the system automatically (using option OC) from the operator/programmer panel, perform the following steps:

1. Enter the following to load the configurator program:

   (B),B,(I),(B),38F0,(I),(I)

   When loaded, a 38XX halt code displays in output indicators of operator/programmer panel. If a 382A or a 3801 halt code occurs, enter the following to continue:

   (B),6,(I),(I)

2. If a 3822 halt code occurs, enter:

   (B),1F,(I),(B),0300,(I),(I)

   A 382E halt then occurs to allow option selection.

3. Enter the following to select configure system option 0C:

   (B),1F,(I),(B),0C00,(I),(I)

   Refer to the following procedures for specific instructions pertaining to the display of halt codes.

4. Continue to enter appropriate parameters until a 3800 or 3805 halt code displays. This indicates that diskette configuration is completed. You can now perform diagnostic checkout.

Configurator Table Entries

The configurator record contains system information (entry 00), and one entry for each device address used (entries 01-XX). Tables 6-4 and 6-5 list the formats used for the system entry and the device entries.

NOTE

Do not attempt to use an IBM configurator to construct the configuration table on a CDC BASIC diskette. All CDC devices would be configured wrong in the table.

Entry 00 (System Entry)

Change only entry 00, bytes 05 through 09 (functions 04, 06, and 08). Enter all other information by the configurator program. Refer to table 6-4 for format.

TABLE 6-4. SYSTEM ENTRY FORMAT

Byte	Definition
00 and 01	Constant 00.
02	Entry number of last entry in table.
03	Configurator flags. Bits 00 through 06 are reserved. When bit 07 is a logical 1 = diskette has been configured. When bit 07 is a logical 0 = diskette has not been configured.
04	Not used.

TABLE 6-4. SYSTEM ENTRY FORMAT (Contd)

Byte	Definition
05	Processor type † 22 = 4952 24 = 4954 23 = 4953 26 = 4956 25 = 4955
06 and 07	Storage word 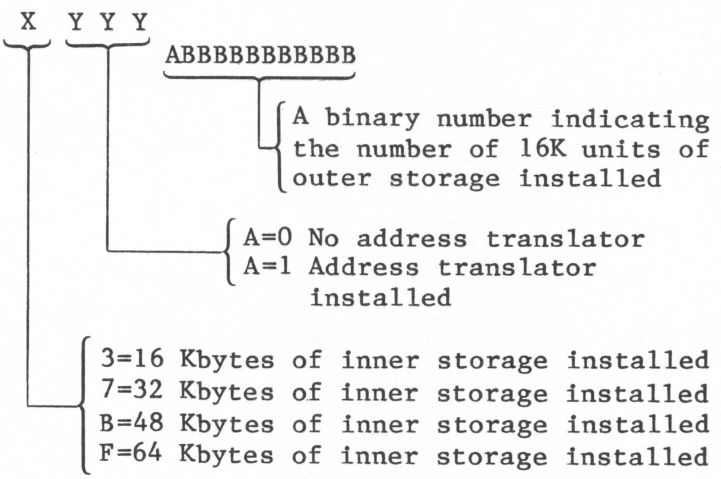 NOTES 1. Storage word = F803 indicates 112 Kbyte of total storage installed. 2. If BBBBBBBBBBB is greater than 0, then A must equal 1 and the address translator feature must be installed. 3. Inner storage can be addressed only by the storage address register. 4. Only the address translator feature can address outer storage. 5. Storage word = 7802 indicates one 32 Kbyte card or two 16 Kbyte cards installed as inner storage, one 32 Kbyte card or two 16 Kbyte cards installed as outer storage, and the address translator installed.
08 and 09	Alternate console address and type (AATT).
0A through 0E	Not used.
0F	Release level of this configuration record.

† Several device MAPs measure time. Processor type indicates instruction execution time to the MAPs. The wrong processor type code causes MAP failures.

Entries 01-XX (Device Entries)

Refer to table 6-5 for device entry format.

TABLE 6-5. DEVICE ENTRY FORMAT

Byte	Definition
00	Device address.
01	Device type.
02	Flag byte: Bit 0 is used by DCP (in storage). Bit 0 is always 0 on disk. Bit 1=1 indicates this entry is chained to next entry. Bit 2=1 indicates the last entry in configurator table. Bit 3=1 indicates the last entry in this sector. Bits 4 through 6 are reserved. Bit 7 is the last available entry in configurator table. NOTES 1. Ignore bits 2, 3, and 7 when making adds or changes. The configurator program sets/resets them at sort time. 2. Chain bit (byte 02, bit 1) is used to pass two or more entries to a MAP program or diagnostic. Wrong use of the chain bit can cause MAP failures. For example, a missing chain bit causes needed information not to be available to the MAP. Extra chain bits can cause MAPs to be bypassed during and auto run.
03 through 09	Device-dependent data; describes the device to the associated MAPs/diagnostics. If the deivce type is wrong, failures occur. The auto-verify is performed when the configurator load does not check device-dependent data.
0A through 0D	Reserved.
0E through 0F	Device ID word.

Alternate console devices are as follows:

TTY Console
DA 40 00 00 00 00 00 00 00 00 00 00 00 00 00 10

4979 Display Station †
DA 42 00 00 00 00 00 00 00 00 00 00 00 00 04 06

4978 Display Station
DA 45 00 00 00 00 00 00 00 00 00 00 00 00 04 0E

4974 Matrix Printer ††
DA 62 00 00 00 00 00 00 00 00 00 00 00 00 02 06

80610 Display Station †
DA 42 00 00 00 00 00 00 00 00 00 00 00 00 04 06

80420 Matrix Printer ††
DA 62 00 00 00 00 00 00 00 00 00 00 00 00 02 06

80450 Band Printer
DA 66 00 00 00 00 00 00 00 00 00 00 00 00 03 06

Communication cards are as follows:

RPQ
DA 81 00 00 00 00 00 00 00 00 00 00 00 00 2X 36

1310 MFA
DA E6 00 00 00 00 00 00 00 00 00 00 00 00 3X 36

1610 ACCA SL
DA E8 00 00 00 00 00 00 00 00 00 00 00 00 10 0E

2092 ACCA ML
DA E9 00 00 00 00 00 00 00 00 00 00 00 00 2X 0E

2096 FPM LC
DA EA 00 00 00 00 00 00 00 00 00 00 00 00 2X 16

Load devices are as follows:

4964 Diskette
DA 48 00 00 00 00 00 00 00 00 00 00 00 00 01 06

80210 Flexible Disk Drive †††
DA 46 00 00 00 00 00 00 00 00 00 00 00 00 01 06

---

†You must use device type 44 when configuring an IBM diskette.
††You must use device type 64 when configuring an IBM diskette.
†††The format also applies to 80240 series MMDs (contains an FDD packaged in the MMD enclosure).

4965 Diskette
DA 4B 00 00 00 00 00 00 00 00 00 00 00 00 52 12

4966 Diskette
DA 4A 00 00 00 00 00 00 00 00 00 00 00 00 01 26

80220-10 WREN Hard Disk Drive
DA 7A 00 00 00 00 00 00 00 00 00 00 00 00 3X 06

(Insert parameters when known)

Configurator Table Layout

The configurator table layout is shown as stored in memory. Use the following blank table to assemble a configurator table for your system:

Entry No.	Storage Address	Byte 00	01	02	03	04	05	06	07	08	09	0A	0B	0C	0D	0E	0F
00	3000																
01	3010																
02	3020																
03	3030																
04	3040																
05	3050																
06	3060																
07	3070																
08	3080																
09	3090																
0A	30A0																
0B	30B0																
0C	30C0																
0D	30D0																
0E	30E0																
0F	30F0																

COMMON HALT LIST

Halts are identified by the Wait indicator on the operator/programmer panel being lit.

Diagnostic Control Program (DCP) Halts

Diagnostic control program halts are as follows:

Code	Description
3800	Ready -- enter any valid command.
3801	Bad condition code received from alternate console. Enter the continue command: (B),6,(I),(I)
3802	Program check -- see MAP 3871.
3803	Machine check -- see MAP 3871.
3804	Power thermal warning.
3805	Program terminated -- enter any valid command.
3806	Invalid request -- enter any valid command.
3807	Alternate console is off during testing.
3808	Alternate console is on and test is complete.
3809	Unexpected interrupt -- R0 level 3 contains the interrupt status byte. Location 180A contains the MAP number.
380A	Start -- the program has started.
380C	Program not found -- there is no VTOC entry for the requested program.
3810	Was not expecting reply (F command) data.
3813	Received a command sequence -- to execute, press the console Interrupt switch. To delete the command, change the buffer contents and press the console Interrupt switch. The panel displays halt 3814, and you can enter the command again.
3814	Enter data.
3816	Change keyboard definition for 4978 display. Press any key within 15 seconds, and the panel displays halt 3817.
3817	Press the key requested for keyboard definition.
FFFF	Command or replay has been accepted.

Configurator Halts

The configurator halts are as follows:

Code	Description
3820	This diskette has not been configured before. Enter the continue command: (B),6,(I),(I)
3821	Enter the alternate console device address and the device type, for example: To assign the TTY as the alternate console enter: (B),1F,(I),(B),0040,(I),(I) To assign the programmer panel as the alternate console, enter: (B),1F,(I),(B),0000,(I),(I)
3822	A configuration error(s) occurred on the system. Reply with one of the following: 01 = Terminate 02 = Print all errors 03 = Print options 04 = Bypass TCS errors (B),1F,(I),(B),XX00,(I),(I) where XX = chosen option
3823	There is an invalid entry. Enter the correct entry.
3826	Changes are not saved. Enter 0D to save the configuration table as follows: (B),1F,(I),0D00,(I),(I) Enter 05 to terminate (changes made are lost) as follows: (B),1F,(I),0500,(I),(I)
3827	Enter the correct processor type as follows: 22 = 4952 processor 23 = 4953 processor 25 = 4955 processor 24 = 4954 processor 26 = 4956 processor (B),1F,(I),(B),XX00,(I),(I), where XX = processor type
3828	The device address or type is entered incorrectly. Enter the correct parameter.
3829	The alternate console was not found. This is a warning message. If the console is a printer or a programmer console, enter 6 to continue.

Code	Description
382A	Secure the customer interface. Enter the continue command when customer interface is secure as follows: (B),6,(I),(I)
382B	Is an OEMI card installed? Reply 00 = no, 01 = yes. (B),1F,(I),(B),0000 or 0100,(I),(I)
382C	Do you want to copy the configuration table to another diskette? Reply 0D to copy the table or 05 to terminate.
382D	Is the floating-point feature installed? Reply 00 = no, 01 = yes. (B),1F,(I),(B),0000 or 0100,(I),(I)
382E	The option table is available for entry. Enter the option table information per the following: 01 = Print table 02 = Delete 03 = Change 04 = Alternate console † 05 = Terminate 06 = Processor type 07 = Two-channel switch 08 = Storage size 09 = Print system equipment 0A = Add 0B = Bypass option table 0C = Configure system † 0D = Diskette write † 0E = OEMI 0F = Floating point 10 = Combine (B),1F,(I),(B),XX00,(I),(I), where XX = chosen option
382F	This indicates initial auto-configuration. The diskette has an alternate console assigned. You must complete the initial auto-configuration. Enter 6 to continue: (B),6,(I),(I)
3831	Enter station address ID = XY where X = cable address (0 - 3) and Y = station address (0 - 3).
3832	The programmer or CE console is the assigned alternate console. Enter 6 to continue: (B),6,(I),(I)

† A new alternate console definition or system configuration must be followed by a diskette write to save the new information on the diskette.

Code	Description
3833	OIO (Operator I/O) condition code. R3 = condition code and R4 = AATT where: AA = device address and TT = device type.
3834	An error has occurred. More than one two-channel switch disappeared after a select switch was changed. If there is no alternate console, enter 6 to continue: (B),6,(I),(I)
3835	This is an interrupt condition code. R3 = interrupt condition code and R4 = AATT where: AA = device address and TT = device type.
3836	Is the customer using a common I/O? Reply 00 = no, 01 = yes. (B),1F,(I),(B),0000 or 0100,(I),(I)
3837	An error has occurred. A two-channel switch did not disappear after a select switch was changed. If there is no alternate console, enter 6 to continue: (B),6,(I),(I)
3838	RPQ diagnostics are installed on the system.
383A	Select the entry number in the configurator table to be altered as follows: (B),1F,(I),(B),XX00,(I),(I) Where: XX = table entry number
383B	Enter the desired entry. The format is as follows: AATT,(I),(B),0000,(I),(B),IDID,(I),(B),0000,(I),(B),0000,(I),(B),0000,(I),(B),0000,(I),(B),IDID Where: AA = device address TT = device type IDID = device read ID code (B),8F,(I),(B), entry per above,(I),(I)
383C	An error has occurred. The system cannot find the reflected two-channel switch. If there is no alternate console, enter 6 to continue: (B),6,(I),(I)
383D	Insert the FROM diskette that is used with the merge function (10) and the print configuration function (20). Insert the FROM diskette in the disk unit and answer 01 when completed: (B),1F,(I),(B),0100,(I),(I)

Code	Description
383E	Insert the BASIC diskette that is used with the merge function (10) and the print configuration function (20). Remove the FROM diskette, insert the BASIC diskette, and answer 01 when completed: (B),1F,(I),(B),0100,(I),(I)
3840	An error has occurred. A device is in the hardware but not in the configuration table. Level 3, R3 contains the address (AA00). Level 3, R4 contains the ID word. Record the contents of R3 and R4. Enter the continue command as follows: (B),6,(I),(I)
3841	An error has occurred. A device is in the table but not in the hardware. Level 3, R3 contains the device address and configuration table entry number (AAEE). Record the contents of R3 and enter the continue command as follows: (B),6,(I),(I)
3842	An error has occurred. The ID word received does not match the ID word stored in the configurator table for this address. Level 3, R3 contains the device address and configuration table entry number (AAEE). Level 3, R4 contains the ID word received. Record the contents of R3 and R4. Enter the continue command as follows: (B),6,(I),(I)
3843	An error has occurred. An entry in the configurator table has a device type and device ID that do not match. Level 3, R3 contains the device address and configuration table entry number (AAEE). Record the contents of R3 and enter the continue command as follows: (B),6,(I),(I).
3844	An error has occurred. The system received a bad condition code in response to a Read ID command. Level 3, R3 contains the device address and the condition code (AACC). Record the contents of R3 and enter the continue command as follows: (B),6,(I),(I)
3845	An error has occurred. A two-channel switch was in the wrong position. If there is no alternate console, enter 6 to continue: (B),6,(I),(I)
3846	Enter new configurator table data as follows: (B),8F,(I),(B),0001,(I),(B),0203,(I),(B),0405,(I),(B),0607,(I), (B),0809,(I),(B),0A0B,(I),(B),0C0D,(I),(B),0E0F,(I),(I)

Code	Description
3848	An error has occurred. Entries do not agree. R1 = entry address of FROM table and R2 = entry address of TO table.
3849	This indicates an alternate console error. The response from the alternate console to a Read ID command does not match that of a supported console device. Level 3, R3 contains the device address and type read from the configurator table (AATT). R4 contains the response from the read ID command. Record R3 and R4. Enter the continue command as follows: (B),6,(I),(I) Halt 382E is displayed. If R3 has the correct device address and type for the alternate console, the console is returning a bad ID. Enter: (B),1F,(I),(B),0500,(I),(I) The configurator then terminates at halt 3800. Enter the assign programmer console command as follows: (B),0005,(I),(I) This disables the alternate console. If R3 does not contain the correct information, change the alternate console bytes at address 3008 and 3009 to the address and type for the console device. To write the record to the diskette, enter: (B),1F,(I),(B),0100,(I),(I)
384A	The configuration table is full.
384B	The configurator chain (byte 02, bit 1) is too long. See MAP 3880.
384C	This is a configuration display message. See the alternate console display for message.
384D	The VTOC does not contain a configurator table (U38F1). Load the general utility program (38F9) and copy 38F1 from another diskette.
384F	This indicates a duplicate address AA, entry EE and EE. There is a duplicate address in the configuration table. If there is no alternate console assigned, level 3, R2 has the device address and R3 and R4 have the table entry numbers. Enter 6 to continue: (B),6,(I),(I)
3850	Enter the inner storage size: 03 = 16 Kbytes 07 = 32 Kbytes 0B = 48 Kbytes 0F = 64 Kbytes (B),1F,(I),(B),XX00,(I),(I), where XX = 03,07,0B, or 0F

Code	Description
3851	Is the address translator installed? Reply 01 = yes and 00 = no. (B),1F,(I),(B),0000 or 0100,(I),(I)
3852	Enter the outer storage size. 0XXX = decimal number of 16 Kbyte of outer storage blocks. (B),1F,(I),(B),0XXX,(I),(I)
3853	ACCA SL is installed (asynchronous control communications adapter, single line). See MAP 13.
3854	AACA ML is installed (asynchronous control communications adapter, multiline). See MAP 13.
3855	BSCA SL is installed (bisynchronous communications adapter, single line). See MAP 13.
3856	BSCA ML is installed (bisynchronous communications adapter, multiline). See MAP 13.
3857	SDLC is installed (sychronous data link control). See MAP 13.
3858	An error has occurred. The specify code entered is not correct.
3859	An error has occurred. The specify code entered is correct but does not match the card.
385B	An error has occurred. A multiline controller has an address domain. See MAP 13.
385C	An error has occurred. There is no interrupt. See MAP 13.
385D	This is a two-channel switch console message. Change the select switch to the processor you are using. See MAP 13.
385E	This is a two-channel switch console message. There is more than one two-channel switch console installed. See MAP 13.
385F	This is a two-channel switch console message. There is at least one two-channel switch console installed. See MAP 13.
3860	This indicates a programmable communications subsystem error message. See MAP 13.
3861	This indicates a programmable communications subsystem error message. See MAP 13.
3862	This indicates a programmable communications subsystem entry. See MAP 13.
3863	Is the alternate console being used installed as common I/O? Reply 00 = no and 01 = yes. (B),1F,(I),(B),0000 or 0100,(I),(I)

Code	Description
3864	Is a programmer or CE console installed on the processor being used? Reply 00 = no and 01 = yes. (B),1F,(I),(B),0000 or 0100,(I),(I)
3865	Is the alternate console being used installed in the farthest common I/O? Reply 00 = no and 01 = yes. (B),1F,(I),(B),0000 or 0100,(I),(I)
3866	The alternate console disappeared after the two-channel switch was changed. See MAP 13.
3867	The alternate console did not appear after the two-channel switch was changed. See MAP 13.
3868	The alternate console did not disappear after the two-channel switch was changed. See MAP 13.
3869	Obtain a programmer or CE console. The configuration program needs a programmer or CE console to continue. The configuration program has been terminated.
386A	ML COMM is installed (multiline communication). See MAP 13.
386B	Tape device is installed. 00 = NRZ1, 01 = dual, FF = PE.
386C	Multifunction attachment is installed. See MAP 13.

MAP Diagnostic Integration (MDI) Halts

MDI halts are as follows:

Code	Description
3C01	Enter address of device to be tested. • From operator/programmer panel: (B),1F,(I),(B),XX00,(I),(I) • From alternate console: FXX
3C05	Enter the starting step number for the loop. • From operator/programmer panel: (B),1F,(I),(B),XXXX,(I),(I) • From alternate console: FXXXX

Code	Description
3C06	Enter the ending step number for the loop using the same procedure as halt 3C05.
3C08	The device at address entered in halt 3C01 is not the type address tested by the requested program. Enter the correct address.
3C0E	No device of that type was found in the configurator table, or the MAP executed and attempted to load a MAP not in VTOC.

COMMANDS

Commands are described here as they would be entered from the operator/programmer panel. You can enter these same commands from an alternate console by entering the command character followed by data, where applicable, and pressing the ENTER key (carriage return key on TTY). No commas are required.

Single-Character Commands (No Data)

Enter the single character commands where (B) = Data Buffer key and (I) = Console Interrupt key as follows:

Command	Key Sequence	Result
5	(B),5,(I),(I)	Disable alternate console and assign operator/programmer panel.
6	(B),6,(I),(I)	Continue program execution
9	(B),9,(I),(I)	Terminate program
A	(B),A,(I),(I)	Start execution
0 †	(B),0,(I),(I)	Answer question no
1 †	(B),1,(I),(I)	Answer question yes

You must enter commands in bits 12 through 15 of the data buffer.

†Commands 0 and 1 apply to test program responses only. Use the F command to answer yes or no to a question in a utility program, for example: F1=yes, F0=no.

Commands Using a Program ID (Commands B and C)

These commands load a program. You must enter the program ID (XXXX) with the command character as follows:

Command	Key Sequence	Result
B	(B),B,(I),(B),XXXX,(I),(I)	Program XXXX loads and executes.
C	(B),C,(I),(B),XXXX,(I),(I)	Program XXXX loads and waits for option selection command D.

Command to Set Option Bits On (Command D)

Enter as follows the command to set the option bits on as follows:

(B),1D,(I),(B),XXXX,(I),(I)

- XXXX: Mask of options to turn on
- D: Command character
- 1: Number of 16-bit words in mask (always 1) and used only when command is entered from operator/programmer panel

Option bits are as follows:

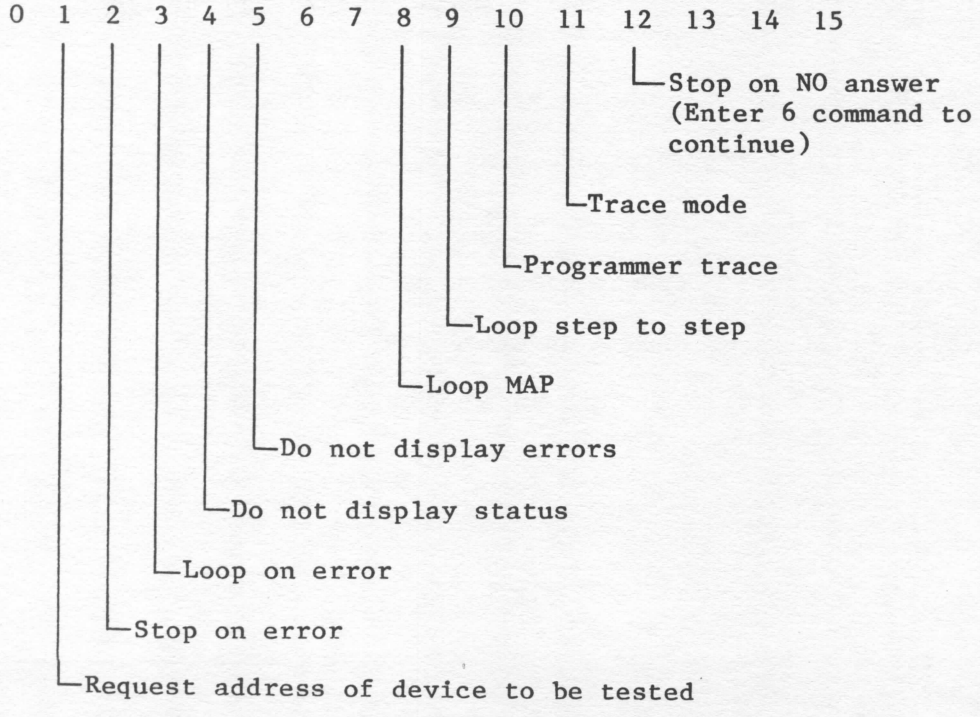

You must follow command D with the A command to start the execution of the program.

Command to Enter Variable Data (Reply to a Program), (Command F)

The command to enter variable data (reply to a program) is entered as follows:

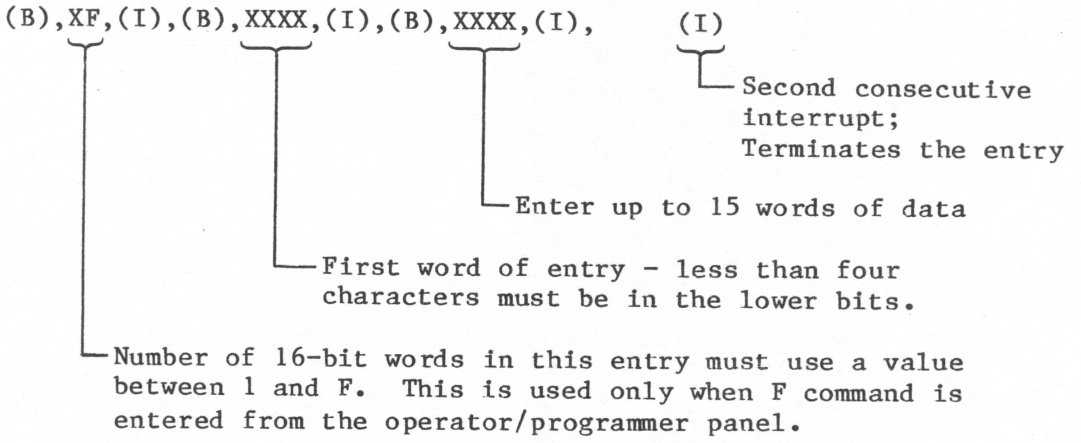

Section 7 provides the following top-level assembly (TLA) drawings and accompanying spare parts lists.

Part Number	Description
22241013	Tape Enclosure, 1/4-inch wide TLA
22205875	Chassis Assembly SPL
22241039	Fan Assembly
22241038	Voltage Selector Switch Assembly
22241037	Power Input Harness Assembly
22241027	I/O Cable Assembly
22241036	Harness Assembly
22242670	Attachment Card TLA
22205761	Attachment Card Assembly
22205770	Attachment Card

SHEET REVISION STATUS	REVISION RECORD						
	REV	ECO	DESCRIPTION	DRFT	DATE	CHKD	APP
	01	3000-22	RELEASE CLASS B	MB	5-31-84	WA	
	02	3273	P/L CHG ONLY	MB	11/19/84	[illegible]	[illegible]
	03	3277	SEE ECO	MB	12/6/84	[illegible]	[illegible]
	A	1000-324	RELEASE CLASS A	MB	8-26-84	WES	[illegible]

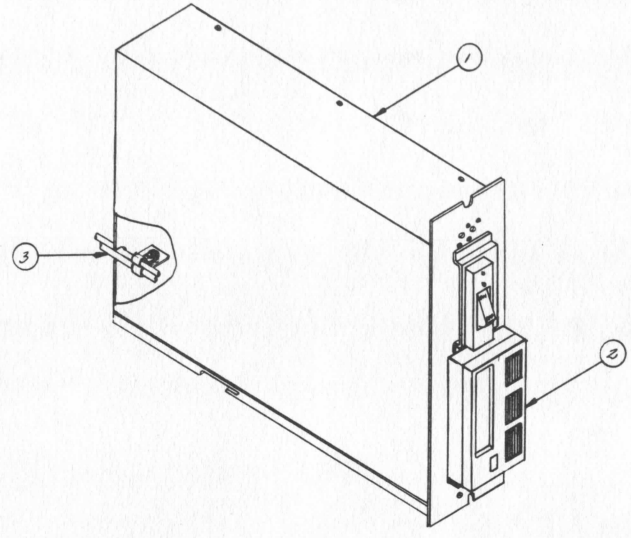

PL 22241013

DETACHED LISTS

UNLESS OTHERWISE SPECIFIED DIMENSIONS ARE IN INCHES
TOLERANCES
2 PLACE ± / 2 PLACE ± / ANGLES ± /
DO NOT SCALE DRAWING
MATERIAL
FINISH

CONTROL DATA

FIRST USED ON	BF605A	
DWN	MBRITTINGHAM	8-23-84
CHKD	W.Wigent	9-10-84
ENGR	R.Sullivan	9-10-84
MFG	R.M. Mabry	11-2-84
QA	R.L. Dixon	11-16-84
APPR		

TITLE: TOP LEVEL ASSEMBLY
TAPE ENCLOSURE
1/4 WIDE

CODE IDENT		DRAWING NO.	CD.
53810	C	22241013	

SCALE | NHA 22241012 | SHEET 1 OF 1

22241013

ASSEMBLY PARTS LIST

BUILD ARC 560

PRINT DATE	PAGE	FILE CHANGE NO.
11-19-84	1	1000 324

DIV.	ASSEMBLY NUMBER	CD	REV.	DWG.	DESCRIPTION	MC	STATUS	STATUS DATE	ENG. RESP.	FILE DATE
0620	22241013	6	A	C	TLA, TAPE ENCLOSURE 1/4 WIDE	G	REL	11-19-84	SERIES 1	11-19-84

T	FIND NO	LI	PART NUMBER	CD	M	QUANTITY	U/M	PART DESCRIPTION	MC	YLD	ECO. NO. IN	ECO. NO. OUT	S/N	WK IN	WK OUT
	001	01	22205875	2		1	PC	CHASSIS ASSY	S						
	002	01	22205858	8		1	PC	TAPE DRIVE,STREAMING TAPE	P						
	003	01	22241027	6		1	PC	CABLE ASSY,I/O EXT TAPE 16FT	V			D003273			8443
	003	02	22241050	8		1	PC	CABLE ASSY, I/O EXT 1/4 WIDE	V		D003273			8443	
								0004 TOTAL LINES							

COPY 2

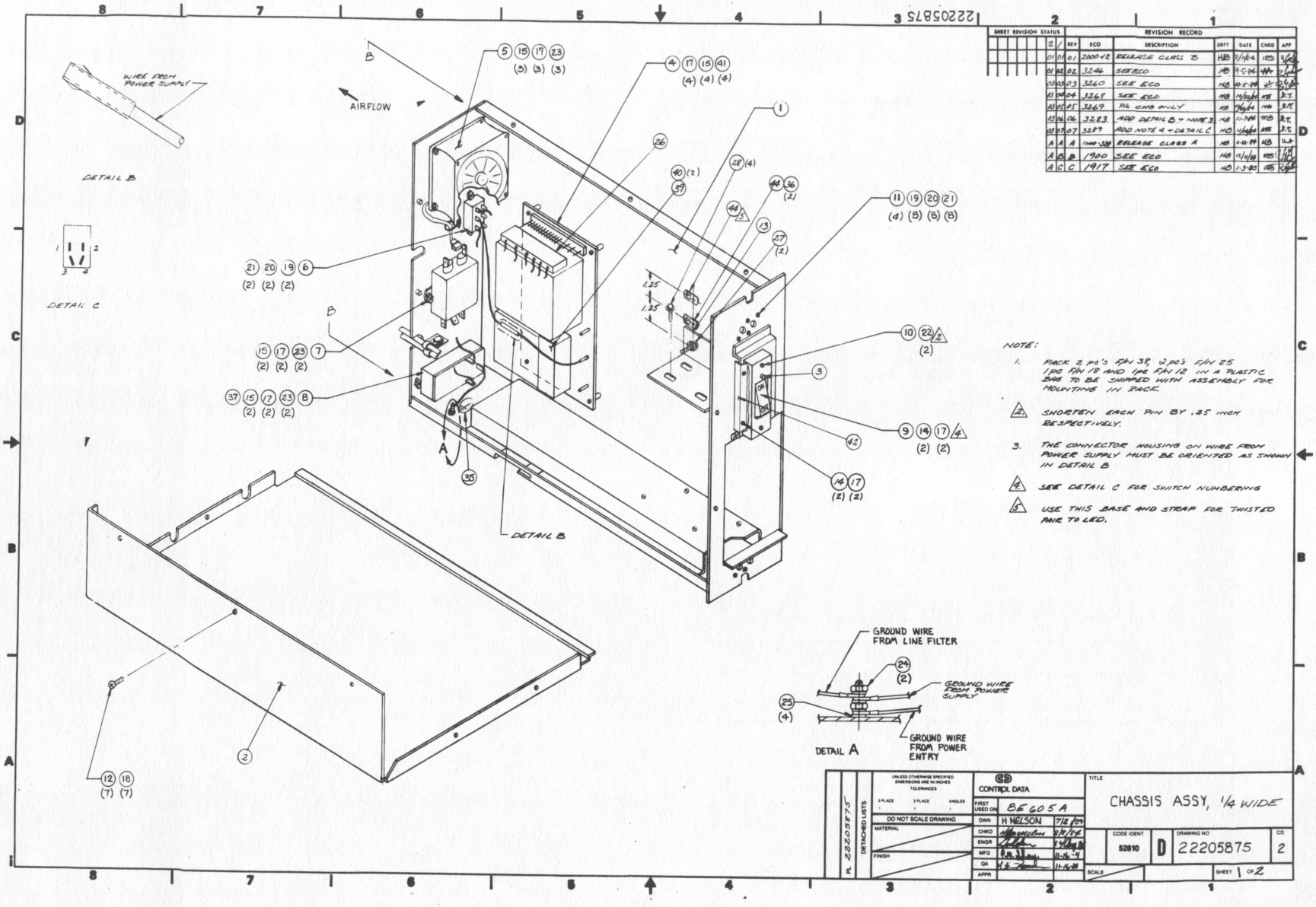

SHEET REVISION STATUS	REVISION RECORD						
Z/	REV	ECO	DESCRIPTION	DFT	DATE	CHKD	APP
01 01	01	2000-42	RELEASE CLASS B	HB	12/1/84	[illegible]	[illegible]
01 02	02	3246	SEE ECO	HB	9-5-86	[illegible]	[illegible]
02 03	03	3260	SEE ECO	HB	10-1-86	[illegible]	[illegible]
03 04	04	3268	SEE ECO	HB	11/14/86	[illegible]	[illegible]
04 05	05	3269	P/L CHG ONLY	HB	12/4/86	[illegible]	[illegible]
05 06	06	3283	ADD DETAIL B - NOTE 3	HB	11-7-88	[illegible]	[illegible]
06 07	07	3289	ADD NOTE 4 + DETAIL C	HB	11/16/88	[illegible]	[illegible]
A A	A	1000-338	RELEASE CLASS A	HB	2-16-89	[illegible]	[illegible]
A B	B	1900	SEE ECO	HB	12/6/94	[illegible]	[illegible]
A C	C	1917	SEE ECO	HB	1-3-95	[illegible]	[illegible]

NOTE:

1. PACK 2 pc's P/N 38, 2 pc's P/N 25, 1 pc P/N 18 AND 1 pc P/N 12 IN A PLASTIC BAG TO BE SHIPPED WITH ASSEMBLY FOR MOUNTING IN RACK.
2. SHORTEN EACH PIN BY .25 INCH RESPECTIVELY.
3. THE CONNECTOR HOUSING ON WIRE FROM POWER SUPPLY MUST BE ORIENTED AS SHOWN IN DETAIL B
4. SEE DETAIL C FOR SWITCH NUMBERING
5. USE THIS BASE AND STRAP FOR TWISTED PAIR TO LED.

UNLESS OTHERWISE SPECIFIED DIMENSIONS ARE IN INCHES. TOLERANCES: 3 PLACE ± ; 2 PLACE ± ; ANGLES ±	CONTROL DATA	TITLE	CHASSIS ASSY, 1/4 WIDE
DO NOT SCALE DRAWING	FIRST USED ON: BE605A		
MATERIAL	DWN: H NELSON 7/12/89		
FINISH	CHKD: [signature] 9/8/94		
DETACHED LISTS: PL 22205875	ENGR: [signature] 9/8/94	CODE IDENT: 52810	DRAWING NO: D 22205875 CD 2
	MFG: [signature] 11-16-94	SCALE:	SHEET 1 OF 2
	QA: [signature] 11-16-94		
	APPR:		

REVISION RECORD						
REV	ECO	DESCRIPTION	DRFT	DATE	CHKD	APP

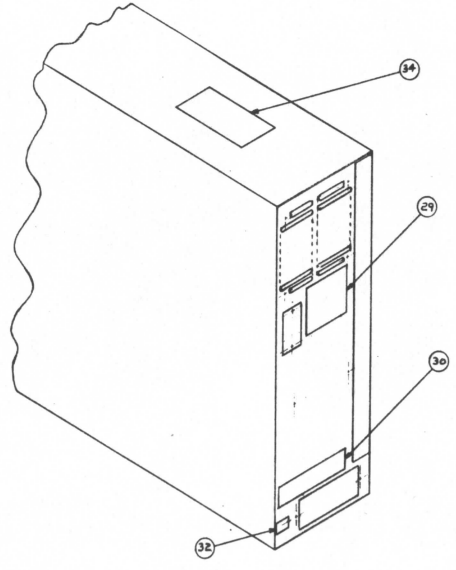

VIEW B

CHASSIS ASSY. 14 WIRE	82810	22205875	A
	D	QUANTITY 2	SHEET

ASSEMBLY PARTS LIST

BUILD ARC 552

PRINT DATE	PAGE	FILE CHANGE NO.
12-26-84	1	0001917

DIV.	ASSEMBLY NUMBER	CD	REV.	DWG	DESCRIPTION	MC	STATUS	STATUS DATE	ENG. RESP.	FILE DATE
0620	22205875	2	C	D	CHASSIS ASSY	S	REL	11-19-84	SERIES 1	12-24-84

TYP	FIND NO.	LI	PART NUMBER	CD	M	QUANTITY	U/M	PART DESCRIPTION	MC	YLD	ECO. NO. IN	ECO. NO. OUT	S/N	WK IN	WK OUT
	001	01	22205860	4		1	PC	CHASSIS, 1/4 WIDE	P						
	002	01	22205861	2		1	PC	COVER, PWB MOUNT	P						
	003	C1	51918823	9		1	PC	LED, PNL MTD RED 4.0MCD 120MW	P						
	004	01	22205892	7		1	PC	POWER SUPPLY	P						
	005	C1	22241039	1		1	PC	FAN ASSY	N						
	006	C1	22241038	3		1	PC	HARNESS, VOLT SELECT SWITCH	N						
	007	C1	15384132	5		1	PC	LINE FILTER, RFI	P						
	008	01	22241037	5		1	PC	POWER INPUT HARNESS ASSY	N						
	009	01	51918798	3		1	PC	SW, ROCKER SPST ON-NONE-OFF	P						
	010	C1	22245508	1		1	PC	BEZEL,NARROW	P						
	011	01	51776006	2		4	PC	CLIP SPRING .135DIA	P						
	012	01	10127122	9		7	PC	MSCR PAN PHL 8-32X.375 STL ZP	P			D003246			8436
	012	02	10127122	9		8	PC	MSCR PAN PHL 8-32X.375 STL ZP	P		D003246			8436	
	013	C1	22205862	0		1	PC	BRACKET, CHASSIS	P						
	014	01	10127111	2		2	PC	MSCR PAN PHL 6-32X.25 STL ZP	P			D003268			8443
	014	C2	10127111	2		4	PC	MSCR PAN PHL 6-32X.25 STL ZP	P		D003268			8443	
	015	01	10127114	6		8	PC	SCREW,MCH,PAN HD 6-32X.500	P			D003260			8440
	015	02	10127114	6		12	PC	SCREW,MCH,PAN HD 6-32X.500	P		D003260	D001917		8440	8507
	015	03	10127114	6		11	PC	SCREW,MCH,PAN HD 6-32X.500	P		D001917			8507	
	017	01	10126401	8		14	PC	WSHR, NO.6 EXT/T LK STL ZP	P			D003268			8443
	017	C2	10126401	8		16	PC	WSHR, NO.6 EXT/T LK STL ZP	P		D003268	D001917		8443	8507
	017	03	10126401	8		15	PC	WSHR, NO.6 EXT/T LK STL ZP	P		D001917			8507	
	018	01	10126402	6		7	PC	WSHR, NO.8 EXT/T LK STL ZP	P			D003246			8436
	018	02	10126402	6		8	PC	WSHR, NO.8 EXT/T LK STL ZP	P		D003246			8436	

COPY 2

ASSEMBLY PARTS LIST

BUILD ARC 552

PRINT DATE	PAGE	FILE CHANGE NO.
12-26-84	2	0001917

DIV.	ASSEMBLY NUMBER	CD	REV.	DWG	DESCRIPTION	MC	STATUS	STATUS DATE	ENG. RESP.	FILE DATE
0620	22205875	2	C	D	CHASSIS ASSY	S	REL	11-19-84	SERIES 1	12-24-84

TYP	FIND NO.	LI	PART NUMBER	CD	M	QUANTITY	U/M	PART DESCRIPTION	MC	YLD	ECO. NO. IN	ECO. NO. OUT	S/N	WK IN	WK OUT
	019	01	10127104	7		10	PC	SCREW,MCH,PAN HD,4-40X.375	P						
	020	01	10125103	1		10	PC	NUT,HEX,4-40	P						
	021	01	10126400	0		10	PC	WSHR, NO.4 EXT/T LK STL ZP	B						
	022	01	10125717	8		2	PC	MSCR FLT PHL 6-32X.750 STL ZP	B						
	023	01	10125105	6		8	PC	NUT, HEX 6-32 MSCR STL ZP	P			D001917			8507
	023	02	10125105	6		7	PC	NUT, HEX 6-32 MSCR STL ZP	P		D001917			8507	
	024	01	10125108	0		2	PC	NUT, HEX 10-32 MSCR STL ZP	P						
	025	01	10126403	4		4	PC	EXT TOOTH LOCK WASHER NO 10	P			D003246			8436
	025	02	10126403	4		6	PC	EXT TOOTH LOCK WASHER NO 10	P		D003246			8436	
	026	01	22241036	7		1	PC	HARNESS ASSY	N						
	027	01	00860101	5		2	PC	NUT, HEX 6-32 PL SLF-LKG STL	P						
	028	01	00860302	9		4	PC	MSCR HEX-LK PLN 6-32X5/16 STL	B						
	029	01	21987640	6		1	PC	LABEL FCC RFI	P						
	030	C1	22213414	0		1	PC	LABEL, WARNING	P						
	031	01	15165432	4		1	PC	CABLE, 3 COND 18AWG UL CSA	P			D003260			8440
	032	01	22213417	3		1	PC	LABEL, FUSE	P						
	033	C1	22213412	4		1	PC	LABEL, POWER CORD	P			D003260			8440
	034	C1	24547539	7		1	PC	PLATE, WARNING	P						
	035	C1	94224667	9		1	PC	LABEL INFORMATION (TYPE XX)	P						
	036	01	94277400	1		1	PC	STRAP,CABLE TIE	P			D003260			8440
	036	02	94277400	1		2	PC	STRAP,CABLE TIE	P		D001900			8447	
	037	01	93418027	4		1	PC	FUSE 1/4X1 1/4 GLASS 2A 3AG	P			D003269			8443

COPY 2

ASSEMBLY PARTS LIST

PRINT DATE	PAGE	FILE CHANGE NO
12-26-84	3	D001917

BUILD ARC 552

DIV	ASSEMBLY NUMBER	CD	REV	DWG	DESCRIPTION	MC	STATUS	STATUS DATE	ENG RESP	FILE DATE
0620	22205875	2	C	0	CHASSIS ASSY	S	REL	11-19-84	SERIES 1	12-24-84

T	FIND NO	LI	PART NUMBER	CD	M	QUANTITY	U M	PART DESCRIPTION	MC	YLD	ECO. NO. IN	ECO. NO. OUT	S/N	WK IN	WK OUT
	037	02	93418327	8		1	PC	FUSE, FAST ACTION 2 AMP 250V	P		D003269			8443	
	C38	01	10127142	7		2	PC	SCREW,MCH,PAN HD,10-32X3/8	P		D003246			8436	
	039	01	22241067	2		1	PC	GUARD, SHOCK	P		D003246			8436	
	040	01	65864101	4		2	PC	CLIP U TYPE	P		D003246			8436	
	041	01	10125605	5		4	PC	WSHR NO 6 TYP A PLN STL ZP	P		D003260			8440	
	042	01	22250165	2		1	PC	PLATE, SWITCH COVER	P		D003268	D001917		8443	8507
	042	02	22205894	3		1	PC	GUARD, SWITCH	P		D001917			8507	
	043	01	22250166	0		1	PC	PLATE, SWITCH COVER	P		D003268	D001917		8443	8507
	044	01	94277503	2		2	PC	BASE MOUNTING TYPE 2 ALUM	P		D001900			8447	
								0055 TOTAL LINES							

COPY 2

CONTROL DATA CORPORATION	CODE IDENT 52810	SHEET 2 OF 2		DOCUMENT NO. 22241039	REV. A;

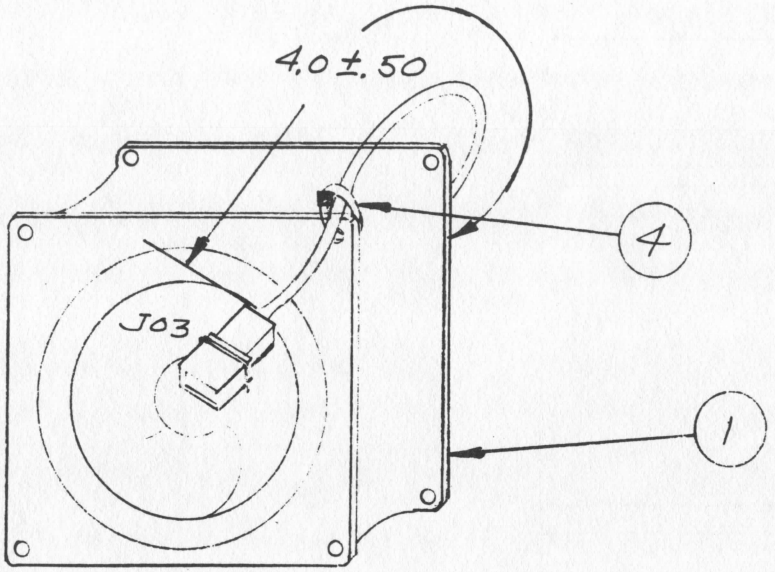

BUILD ARC 552

ASSEMBLY PARTS LIST

PRINT DATE	PAGE	FILE CHANGE NO.
11-19-84	1	1000 324

DIV.	ASSEMBLY NUMBER	CD	REV.	DWG.	DESCRIPTION	MC	STATUS	STATUS DATE	ENG. RESP.	FILE DATE
0620	22241039	1	A	A	FAN ASSY	N	REL	11-19-84	SERIES 1	11-19-84

T	FIND NO	LI	PART NUMBER	CD	AA	QUANTITY	U/M	PART DESCRIPTION	MC	YLD	ECO. NO. IN	ECO. NO. OUT	S/N	WK IN	WK OUT
	001	01	15005688	5		1	PC	FAN, D.C.	P						
	002	01	75724522	0		1	PC	CONNECTOR, PIN HOUSING 2 POS	P						
	003	01	75724555	0		2	PC	CONTACT, MALE PIN	P						
	004	01	94277400	1		1	PC	STRAP,CABLE TIE	P						
								0004 TOTAL LINES							

COPY 2

CONTROL DATA CORPORATION	CODE IDENT 52810	SHEET 2 OF 2		DOCUMENT NO. 22241038	REV. A

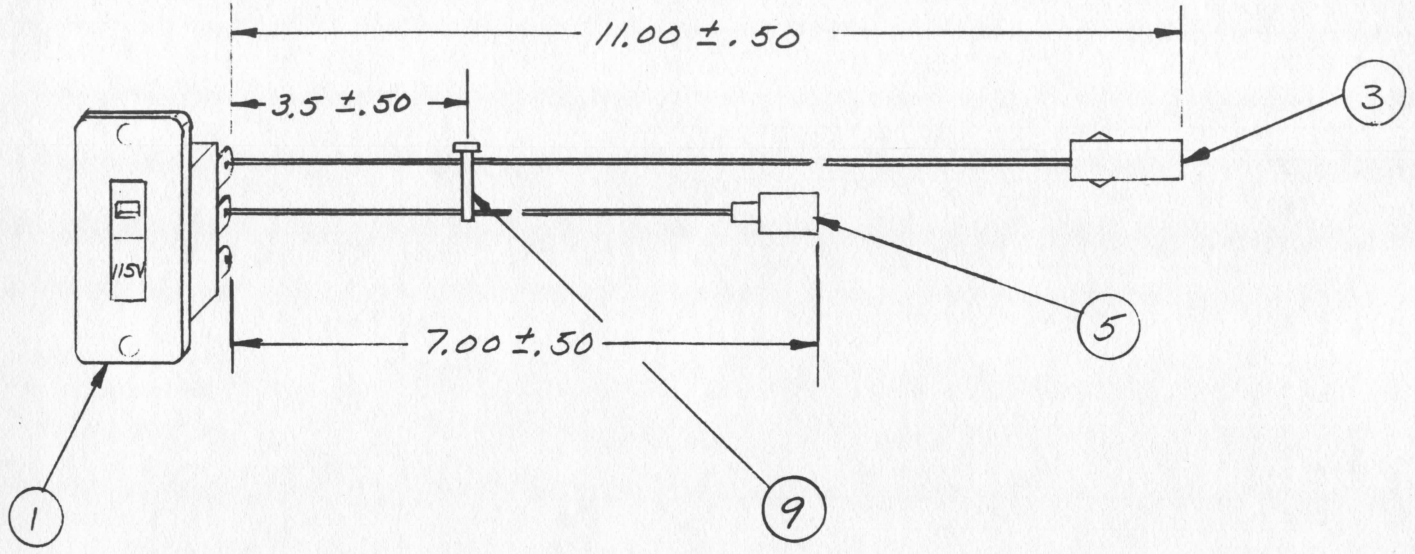

ASSEMBLY PARTS LIST

BUILD ABC 552

PRINT DATE	PAGE	FILE CHANGE NO.
11-19-84	1	1000 324

DIV.	ASSEMBLY NUMBER	CD	REV.	DWG.	DESCRIPTION	MC	STATUS	STATUS DATE	ENG. RESP.	FILE DATE
0620	22241038	3	A	A	HARNESS, VOLT SELECT SWITCH	N	REL	11-19-84	SERIES 1	11-19-84

T	FIND NO.	LI	PART NUMBER	CD	M	QUANTITY		U/M	PART DESCRIPTION	MC	YLD	ECO. NO. IN	ECO. NO. OUT	S/N	WK IN	WK OUT
	001	01	15002347	1		1		PC	SWITCH, AC SELECTION	P						
	002	01	94320301	8		2		PC	CONTACT, SOCKET	P			DQ03282			8444
	002	02	94320301	8		1		PC	CONTACT, SOCKET	P		DQ03282			8444	
	003	01	51833400	8		2		PC	CONN, RECEPTACLE 0.093 SERIES	P			DQ03282			8444
	003	02	51833400	8		1		PC	CONN, RECEPTACLE 0.093 SERIES	P		DQ03282			8444	
	004	01	94320401	6		1		PC	CONTACT, PIN	P						
	005	01	51837208	1		1		PC	CONN, PLUG 0.093 SERIES	P						
	006	01	15003300	9		1	500	FT	WIR 18GA STRD BLK 300V UL PVC	W						
	007	01	15003304	1		1		FT	WIR 18GA STRD YEL 300V UL PVC	P			DQ03282			8444
	008	01	95024633	0		AR		LB	SOLDER, RESIN CORE	P						
	009	01	94277400	1		1		PC	STRAP,CABLE TIE	P		DQ 3289			8446	

0011 TOTAL LINES

COPY 2

CONTROL DATA CORPORATION	CODE IDENT 52810	SHEET 2 OF 2		DOCUMENT NO. 22241037	REV. A

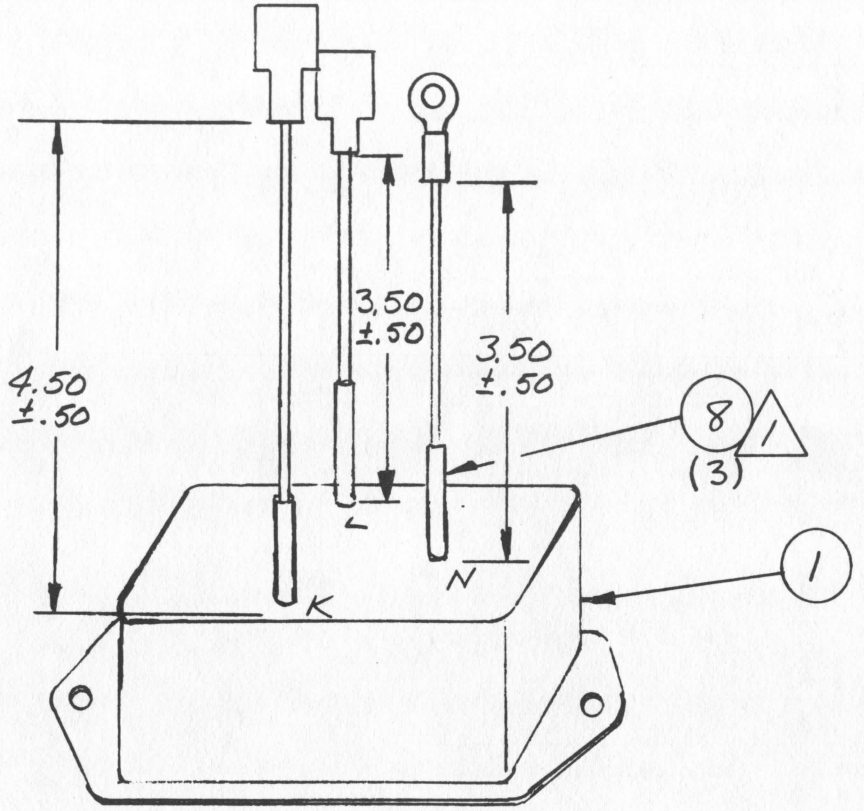

ASSEMBLY PARTS LIST

PRINT DATE	PAGE	FILE CHANGE NO.
11-26-84	1	1000 324

DIV.	ASSEMBLY NUMBER	CO REV.	DWG.	DESCRIPTION	MC	STATUS	STATUS DATE	ENG. RESP.	FILE DATE
0620	22241037	5 A		POWER INPUT HARNESS ASSY	N	REL	11-21-84	SERIES 1	11-26-84

T	FIND NO	LI	PART NUMBER	CD	M	QUANTITY		U/M	PART DESCRIPTION	MC	YLD	ECO. NO. IN	ECO. NO. OUT	S/N	WK IN	WK OUT
	001	01	22205743	2		1		PC	MODULE, POWER INPUT	P						
	002	01	95643212	4		2		PC	LUG Q-CONN 22-18 AWG FIG 2	P						
	003	01	15003300	9			300	FT	WIR 18GA STRD BLK 300V UL PVC	W						
	004	01	15003309	0			375	FT	WIRE COPPER 18 GA WHITE	P						
	005	01	15003354	6			300	FT	WIRE 18GA STRD GRN/YEL 300V	P						
	006	01	51797218	8		1		PC	LUG, NO.10 CRMP-R 22-18AWG	P						
	007	01	95024633	0		AR		LB	SOLDER, RESIN CORE	P						
	008	01	24528628	1			250	FT	TUBING INSULATING SIZE 12	B			DQ 3289			8446
	008	02	24534707	5			250	FT	SLEEVING,3/16 HT/SHRINK,BLACK	P		DQ 3289			8446	
									0009 TOTAL LINES							

COPY 2

PART NO.	LENGTH IN FEET
22241027	16.00 ±.50
22241028	10.00 ±.50
22241029	
22241030	
22241031	

22241027

SHEET REVISION STATUS	REVISION RECORD						
REV	ECO	DESCRIPTION	DRFT	DATE	CHKD	APP
01	8000-318	RELEASE CLASS D	MB	7-5-84	MB	[illegible]
02	3272	SEE ECO	MB	10/4/84	[illegible]	[illegible]
A	8000-326	RELEASE CLASS A	MB	11-26-84	[illegible]	[illegible]
B	1907	SEE ECO	MB	12/17/84	MB	[illegible]
B	——	ADD ESD LABEL	MB	12/14/84	MB	[illegible]

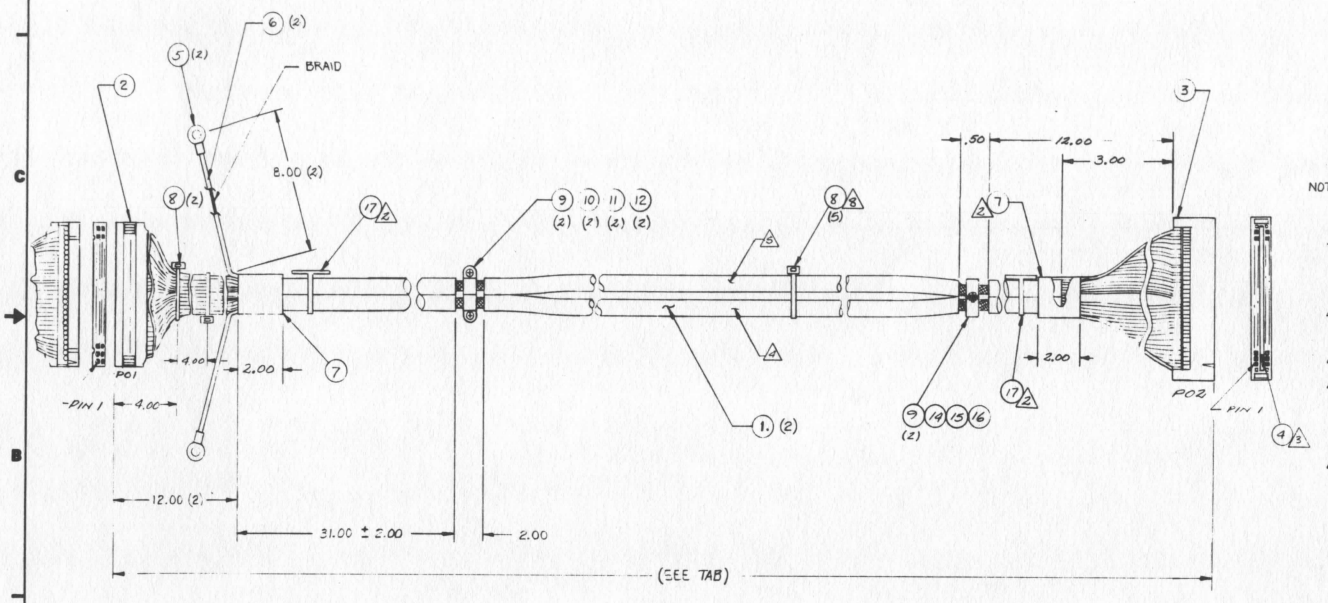

NOTES:

1. MARK WITH CDC PART NO. AND REV. LETTER PER CDC-SPEC 10121508.
2. APPLY LABEL TO CABLE PER CDC DWG NO. E-191061 MARK CDC PART NO. PER TAB BLOCK. IT IS PERMISSABLE TO MARK CDC PART NO. AND REV. LEVEL DIRECTLY ON THE CABLE PROVIDED THE CABLE IS NOT DAMAGED.
3. INSERT POLARIZING KEY BETWEEN 3 & 4 AND 5 & 6.
4. THIS CABLE UTILIZES PINS 7-26.
5. THIS CABLE UTILIZES PINS 27-46.
6. PACK PER CDC INSTRUCTION 905-9400
7. BUCK IDENTIFY WITH CDC PART NUMBER.
8. PLACE TIE WRAPS, F/N 8, APPROXIMATELY 2 FEET APART.

GOVERNMENT DOCUMENT
This document is subject to change without prior notice. Users will receive copy only of the revised document.
AUTO

WL 22241027/28
PL 22241027/28
DETACHED LISTS

UNLESS OTHERWISE SPECIFIED DIMENSIONS ARE IN INCHES
TOLERANCES
3 PLACE .XXX ±.005
2 PLACE .XX ±.05
ANGLES ±.50
DO NOT SCALE DRAWING
MATERIAL
FINISH

CONTROL DATA
FIRST USED ON: SERIES 1

DWN	H. NELSON	7/19/84
CHKD	[illegible]	7/19/84
ENGR	[illegible]	11/19/84
MFG	[illegible]	11-16-84
QA	[illegible]	11-16-84
APPR		

TITLE: CABLE ASSY, I/O, EXTERNAL, 1/4 WIDE

RI | CODE IDENT 52810 | D | DRAWING NO 22241027/31 | CD

SCALE | SHEET 1 OF 1

ASSEMBLY PARTS LIST

PRINT DATE	PAGE	FILE CHANGE NO.
12-17-84	1	DQ01907

BUILD ARC 030

DIV.	ASSEMBLY NUMBER	CD	REV.	DWG.	DESCRIPTION	MC	STATUS	STATUS DATE	ENG. RESP.	FILE DATE
0620	22241027	6	B	D	CABLE ASSY,I/O EXT TAPE 16FT	V	REL	11-19-84	SERIES 1	12-17-84

T	FIND NO	LI	PART NUMBER	CD	M	QUANTITY	U/M	PART DESCRIPTION	MC	YLD	ECO. NO. IN	ECO. NO. OUT	S/N	WK IN	WK OUT
	001	01	15013720	6		32	FT	CABLE	P						
	002	01	65853411	0		1	PC	CONN, CABLE FLAT 50 COND	P						
	003	01	77830162	2		1	PC	CONN, FLAT CABLE 50 CONTACT	P						
	004	01	22205003	1		1	PC	KEY, POLARIZING	P						
	005	01	95604039	8		2	PC	CONNECTOR RING TONGUE	P						
	006	01	24534707	5		1 333	FT	SLEEVING,3/16 HT/SHRINK,BLACK	P						
	007	01	24534726	5		333	FT	SLEEVING, HEAT SHRINK	P						
	008	01	94277400	1		2	PC	STRAP,CABLE TIE	P			DQ01907			8450
	008	02	94277400	1		7	PC	STRAP,CABLE TIE	P		DQ01907			8450	
	009	01	51918609	2		4	PC	CLAMP, TUBE	P						
	010	01	10127143	5		2	PC	SCREW,MCH,PAN HD,10-32X.500	P						
	011	01	10126403	4		2	PC	EXT TOOTH LOCK WASHER NO 10	P						
	012	01	10125108	0		2	PC	NUT, HEX 10-32 MSCR STL ZP	P						
	014	01	10127122	9		1	PC	MSCR PAN PHL 8-32X.375 STL ZP	P						
	015	01	10126402	6		1	PC	WSHR, NO.8 EXT/T LK STL ZP	P						
	016	01	10125106	4		1	PC	NUT, HEX 8-32 MSCR STL ZP	P						
	017	01	94277407	6		2	PC	STRAP CBL TIE TYP 4 TO 5/8	P		DQ01907			8450	
								0017 TOTAL LINES							

COPY 2

ASSEMBLY PARTS LIST

PRINT DATE	PAGE	FILE CHANGE NO.
12-17-84	1	DQ01907

BUILD ARC 033

DIV	ASSEMBLY NUMBER	CD	REV	DWG.	DESCRIPTION	MC	STATUS	STATUS DATE	ENG. RESP.	FILE DATE
0620	22241028	4	B	D	CABLE ASSY,I/O EXT TAPE 10FT	V	REL	11-19-84	SERIES 1	12-17-84

T	FIND NO	LI	PART NUMBER	CD	M	QUANTITY	U/M	PART DESCRIPTION	MC	YLD	ECO. NO. IN	ECO. NO. OUT	S/N	WK IN	WK OUT
	001	01	15013720	6		20	FT	CABLE	P						
	002	01	65853411	0		1	PC	CONN, CABLE FLAT 50 COND	P						
	003	01	77830162	2		1	PC	CONN, FLAT CABLE 50 CONTACT	P						
	004	01	22205003	1		1	PC	KEY, POLARIZING	P						
	005	01	95604039	8		2	PC	CONNECTOR RING TONGUE	P						
	006	01	24534707	5		1 333	FT	SLEEVING,3/16 HT/SHRINK,BLACK	P						
	007	01	24534726	5		333	FT	SLEEVING, HEAT SHRINK	P						
	008	01	94277400	1		2	PC	STRAP,CABLE TIE	P			DQ01907			8450
	008	02	94277400	1		5	PC	STRAP,CABLE TIE	P		DQ01907			8450	
	009	01	51918609	2		4	PC	CLAMP, TUBE	P						
	010	01	10127143	5		2	PC	SCREW,MCH,PAN HD,10-32X.500	P						
	011	01	10126403	4		2	PC	EXT TOOTH LOCK WASHER NO 10	P						
	012	01	10125108	0		2	PC	NUT, HEX 10-32 MSCR STL ZP	P						
	014	01	10127122	9		1	PC	MSCR PAN PHL 8-32X.375 STL ZP	P						
	015	01	10126402	6		1	PC	WSHR, NO.8 EXT/T LK STL ZP	P						
	016	01	10125106	4		1	PC	NUT, HEX 8-32 MSCR STL ZP	P						
	017	01	94277407	6		2	PC	STRAP CBL TIE TYP 4 TO 5/8	P		DQ01907			8450	
								0017 TOTAL LINES							

COPY 2

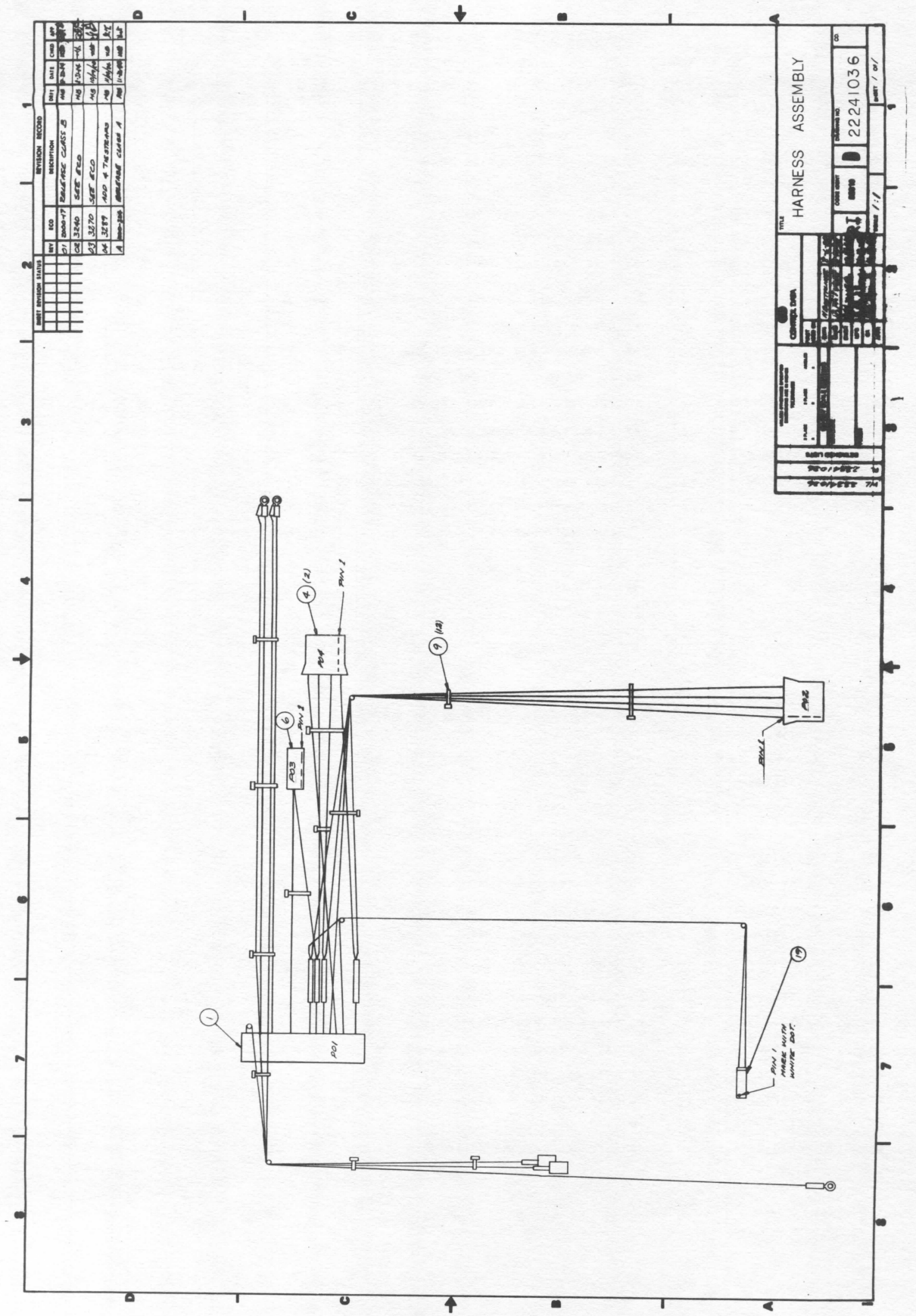
HARNESS ASSEMBLY
2224036
REVISION RECORD
DESCRIPTION
SHEET REVISION STATUS
P01
P03
P04
P05
PAN 1
PAN 1 MARK WITH WHITE DOT.

ASSEMBLY PARTS LIST

BUILD ARC 552

PRINT DATE	PAGE	FILE CHANGE NO.
11-19-84	1	1000 324

DIV.	ASSEMBLY NUMBER	CD	REV.	DWG.	DESCRIPTION	MC	STATUS	STATUS DATE	ENG. RESP.	FILE DATE
0620	22241036	7	A	D	HARNESS ASSY	N	REL	11-19-84	MICRO	11-19-84

T	FIND NO	LI	PART NUMBER	CD	M	QUANTITY	U/M	PART DESCRIPTION	MC	YLD	ECO. NO. IN	ECO. NO. OUT	S/N	WK IN	WK OUT
	001	01	94392437	3		1	PC	HOUSING STD., 19 POSITION	P						
	002	01	44670934	7		10	PC	CONTACT, SOCKET, RECTANGULAR	P			DQ03270			8443
	002	02	44670934	7		11	PC	CONTACT, SOCKET, RECTANGULAR	P		DQ03270			8443	
	003	01	77830661	3		2	PC	KEYING PLUG	P						
	004	01	93947009	2		2	PC	CONNECTOR,SOCKET,HSG,4 POS	P						
	005	01	93943003	9		10	PC	CONTACT,SOCKET,.090 20-14 WIR	P						
	006	01	75724532	9		1	PC	CONNECTOR, SOC HOUSING 2 POS	P						
	008	01	93083006	2		4	PC	TERMINAL,SPLICE, 14-16 AWG	P						
	009	01	94277400	1		8	PC	STRAP,CABLE TIE	P			DQ 3289			8446
	009	02	94277400	1		12	PC	STRAP,CABLE TIE	P		DQ 3289			8446	
	010	01	95643212	4		3	PC	LUG O-CONN 22-18 AWG FIG 2	P						
	011	01	51797218	8		2	PC	LUG, NO.10 CRMP-R 22-18AWG	P						
	012	01	51797211	3		4	PC	LUG,NO.6 CRMP-R 22-18 AWG	P						
	013	01	15003300	9		9	300 FT	WIR 18GA STRD BLK 300V UL PVC	W						
	014	01	15003302	5		3	350 FT	WIR 18GA STRD RED 300V UL PVC	W						
	015	01	15003306	6		3	FT	WIRE,18 GA STRD BLU 300V UL	P						
	016	01	15003309	0		3	187 FT	WIRE COPPER 18 GA WHITE	P						
	017	01	15003354	6		2	FT	WIRE 18GA STRD GRN/YEL 300V	P						
	019	02	53227404	0		1	PC	CLIP LOW FORCE HOUSING 2 CAV	P						
	020	02	53227406	5		2	PC	CLIP LOW FORCE	P						
	021	01	17605900	4		1	250 FT	WIR 24GA TWP BLK/RED 300V	W			DQ03270			8443
	021	02	17605900	4		1	500 FT	WIR 24GA TWP BLK/RED 300V	W		DQ03270			8443	

COPY 2

ASSEMBLY PARTS LIST

BUILD ARC 552

PRINT DATE	PAGE	FILE CHANGE NO.
11-19-84	2	1000 324

DIV.	ASSEMBLY NUMBER	CD	REV.	DWG.	DESCRIPTION	MC	STATUS	STATUS DATE	ENG. RESP.	FILE DATE
0620	22241036	7	A	D	HARNESS ASSY	N	REL	11-19-84	MICRO	11-19-84

T	FIND NO	LI	PART NUMBER	CD	M	QUANTITY	U/M	PART DESCRIPTION	MC	YLD	ECO. NO. IN	ECO. NO. OUT	S/N	WK IN	WK OUT
								0022 TOTAL LINES							

COPY 2

CONTROL DATA CORPORATION	CODE IDENT 52810	SHEET 2 OF 2		DOCUMENT NO. 22242670	REV. A

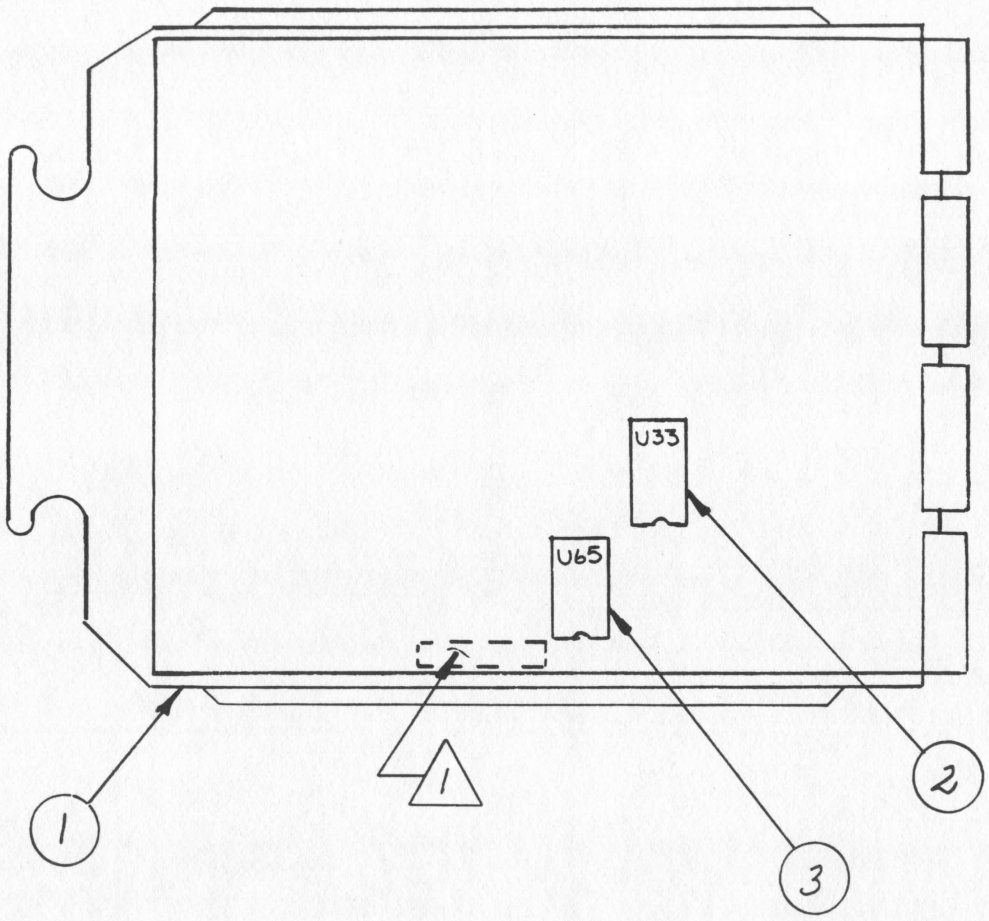

BUILD ABC 560

ASSEMBLY PARTS LIST

PRINT DATE	PAGE	FILE CHANGE NO.
01-31-85	1	DQ01931

DIV.	ASSEMBLY NUMBER	CD	REV.	DWG.	DESCRIPTION	MC	STATUS	STATUS DATE	ENG. RESP.	FILE DATE
0620	22242670	2	B	A	STAC WITH FIRMWARE, TLA	G	REL	01-31-85	SERIES 1	01-31-85

T	FIND NO	LI	PART NUMBER	CD	M	QUANTITY	U/M	PART DESCRIPTION	MC	YLD	ECO. NO. IN	ECO. NO. OUT	S/N	WK IN	WK OUT
	001	01	22205770	5		1	PC	PCB AY,STREAM TAPE ATTACH CD	S						
	002	01	66306483	0		1	PC	IC,ASSY FPLA 16X48X8 O-C	N						
	003	01	22242669	4		1	PC	FIRMWARE STREAMING TAPE 1/4 W	G						
	004	01	22245452	2		1	PC	FRAME AND TAPE ASSEMBLY	A			DQ01931			8505
	005	01	22205042	9		1	PC	ID PLATE ASSY	G			DQ01931			8505
								0005 TOTAL LINES							

COPY 2

EQUIPMENT/CONTROLWARE CONFIGURATOR

CONTROL DATA CORPORATION	X EQUIPMENT ___ CONTROLWARE	DESIGN ACTIVITY Peripheral Systems Group 2200 Berkshire Lane North Plymouth, MN 55441	52810	DOCUMENT NO. 22205761 A
			CODE IDENT	SHEET 3 OF 3 REV
SPECIFICATION NO. 22205759	IDENTIFICATION NO. FA498-A		TITLE: S1 1/4" Streaming Tape Attachment Card Assembly	

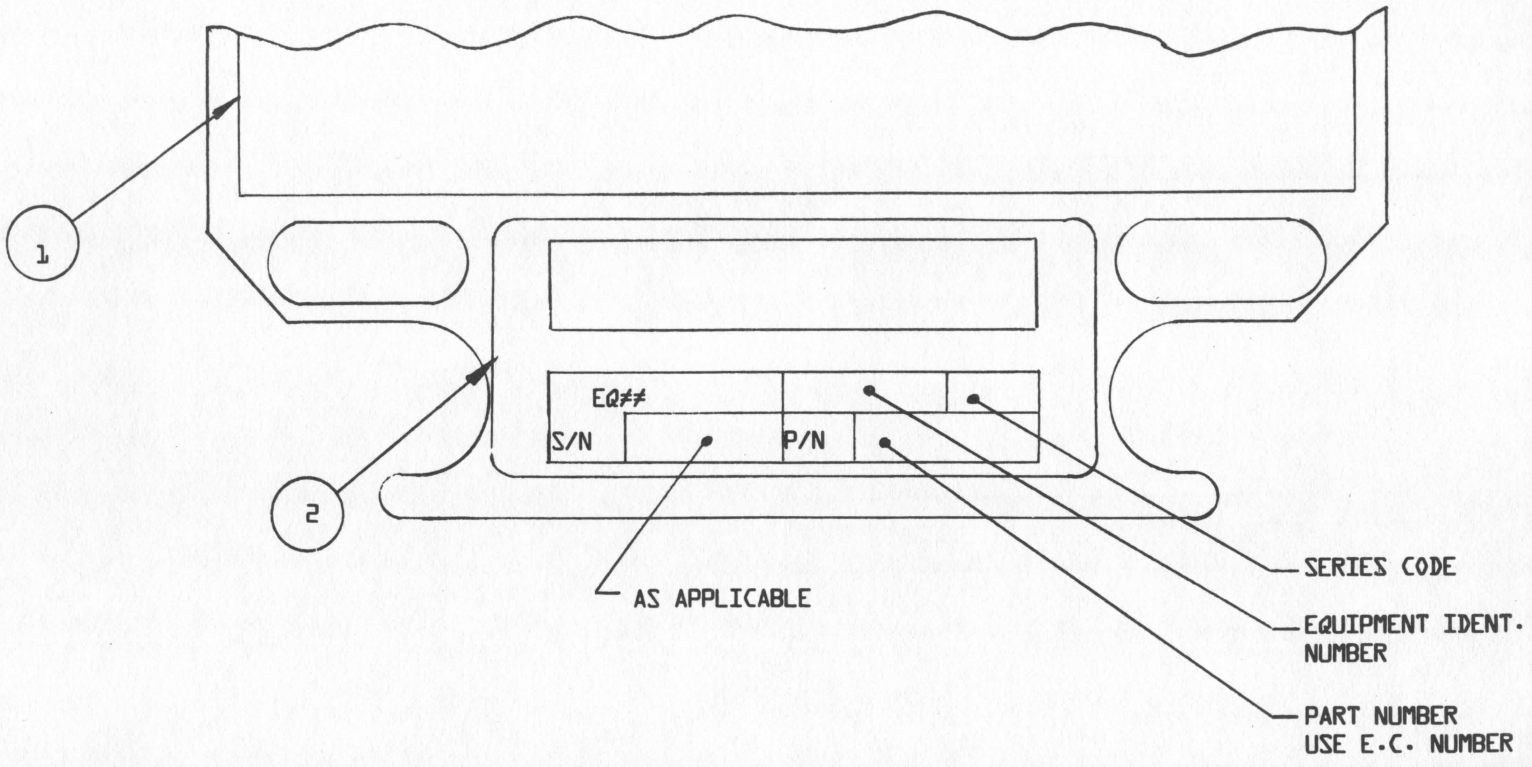

ASSEMBLY PARTS LIST

BUILD ARC 560

PRINT DATE	PAGE	FILE CHANGE NO.
01-29-85	1	D001922

DIV	ASSEMBLY NUMBER	CD	REV	DWG	DESCRIPTION	MC	STATUS	STATUS DATE	ENG. RESP	FILE DATE
0620	22205761	4	B	A	STREAMING TAPE ATT CD	G	REL	01-15-85	SERIES 1	01-29-85

M	FIND NO	LI	PART NUMBER	CD	M	QUANTITY	U/M	PART DESCRIPTION	MC	YLD	ECO. NO. IN	ECO. NO. OUT	S/N	WK IN	WK OUT
	001	01	22205760	5		1	PC	R/P BY 22242670	G			D001922			8503
	001	02	22242670	2		1	PC	STAC WITH FIRMWARE, TLA	G		D001922			8503	
	002	01	22205042	9		1	PC	ID PLATE ASSY	G						

0003 TOTAL LINES

COPY 2

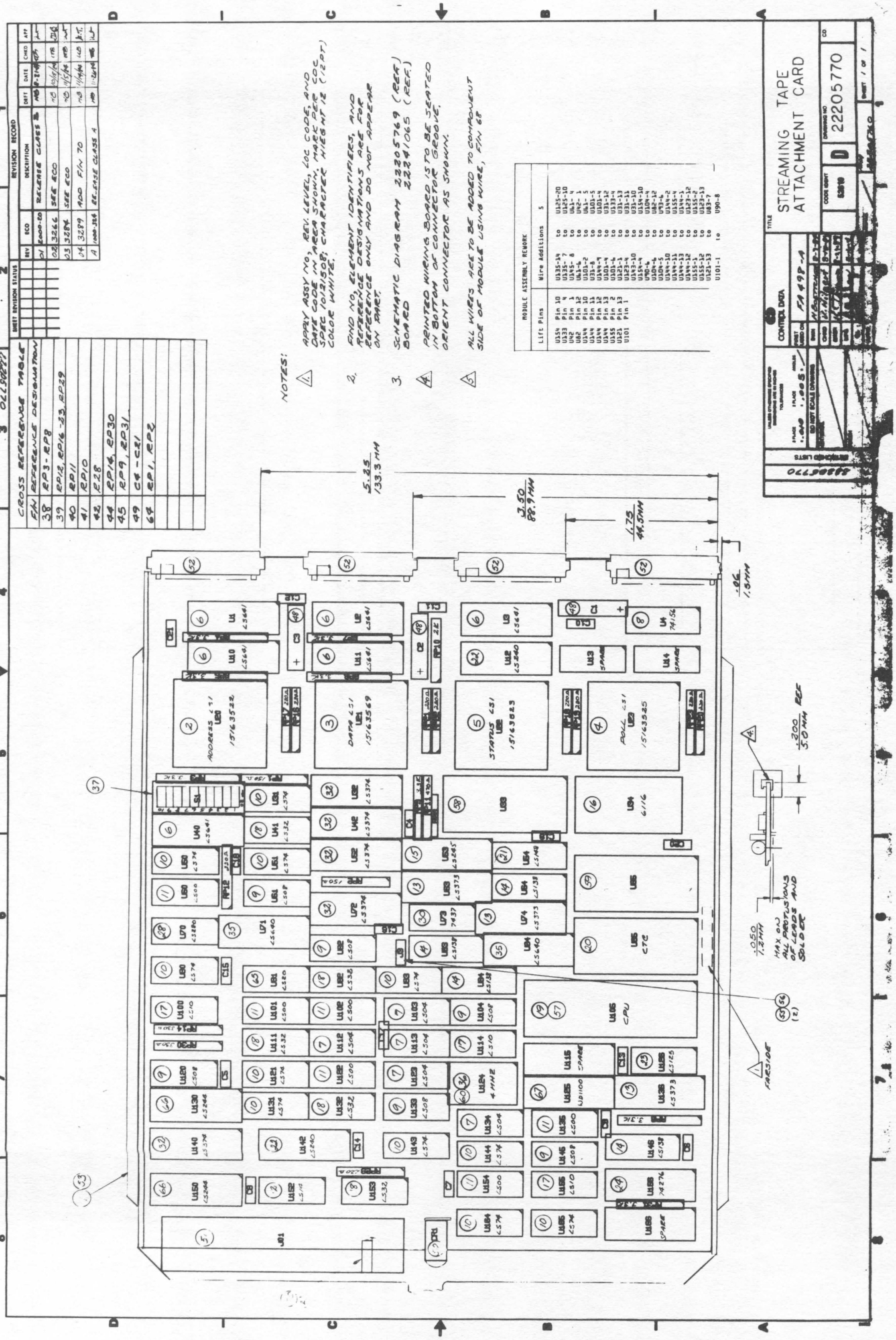

STREAMING TAPE ATTACHMENT CARD
DRAWING NO 22205770
CONTROL DATA
FA498-A
SHEET 1 OF 1
D
UNLESS OTHERWISE SPECIFIED DIMENSIONS ARE IN INCHES
DO NOT SCALE DRAWING
NOTES:
1. APPLY ASSY NO, REV. LEVEL, LOC CODE, AND DATE CODE IN AREA SHOWN, MARK PER CDC SPEC 10121508; CHARACTER HIEGHT 12 (12PT) COLOR WHITE.
2. FIND NO, ELEMENT IDENTIFIERS, AND REFERENCE DESIGNATIONS ARE FOR REFERENCE ONLY AND DO NOT APPEAR ON PART.
3. SCHEMATIC DIAGRAM 22205769 (REF.) BOARD 22241065 (REF.)
4. PRINTED WIRING BOARD IS TO BE SEATED IN BOTTOM OF CONNECTOR GROOVE. ORIENT CONNECTOR AS SHOWN.
5. ALL WIRES ARE TO BE ADDED TO COMPONENT SIDE OF MODULE USING WIRE, F/N 68
MODULE ASSEMBLY REWORK
Lift Pins
U154 Pin 10
U133 Pin 4
U42 Pin 1
U82 Pin 12
U144 Pin 10
U144 Pin 11
U144 Pin 12
U144 Pin 13
U155 Pin 2
U121 Pin 13
U101 Pin 1
Wire Additions 5
U135-14 to U125-20
U135-7 to U125-10
U145-8 to U61-4
U61-6 to U42-1
U101-2 to U61-5
U31-6 to U101-5
U144-9 to U101-4
U101-4 to U31-12
U101-6 to U133-4
U121-1 to U31-13
U123-4 to U31-11
U143-10 to U31-10
U154-4 to U154-10
U90-6 to U104-4
U104-6 to U82-12
U104-5 to U93-6
U144-10 to U144-2
U144-11 to U155-4
U144-13 to U144-1
U144-12 to U123-12
U155-1 to U155-2
U155-12 to U123-13
U121-13 to U83-7
U101-1 to U90-8
CROSS REFERENCE TABLE
F/N REFERENCE DESIGNATION
38 RP3-RP8
39 RP12, RP16-23, RP29
40 RP11
41 RP10
42 E28
44 RP14, RP30
45 RP9, RP31
49 C4-C21
67 RP1, RP2
REVISION RECORD
01 ECO 3266 RELEASE CLASS B
02 3266 SEE ECO
03 3284 SEE ECO
04 3289 ADD F/N 70
A RELEASE CLASS A
5.25 133.3 MM
3.50 88.9 MM
1.75 44.5 MM
.06 1.5 MM
.200 5.0 MM REF
.050 1.2 MM MAX ON ALL PROTRUSIONS OF LEADS AND SOLDER
FARSIDE
ADDRESS LSI U20 15163522
DATA LSI U21 15163569
STATUS LSI U22 15163023
POLL LSI U23 15163025
U166 CPU

ASSEMBLY PARTS LIST

BUILD ARC 551

PRINT DATE	PAGE	FILE CHANGE NO.
11-19-84	1	1000 324

DIV.	ASSEMBLY NUMBER	CD	REV.	DWG.	DESCRIPTION	MC	STATUS	STATUS DATE	ENG. RESP.	FILE DATE
0620	22205770	5	A	D	PCB AY,STREAM TAPE ATTACH CD	S	REL	11-19-84	MICRO	11-19-84

T	FIND NO	LI	PART NUMBER	CD	M	QUANTITY	U/M	PART DESCRIPTION	MC	YLD	ECO. NO. IN	ECO. NO. OUT	S/N	WK IN	WK OUT
	001	01	22241065	6		1	PC	PCB,STREAMING TAPE ATTACH CD	P						
	002	01	15163522	4		1	PC	GATE ARR 1008 TTL ADDRESS CON	P						
	003	01	15163569	5		1	PC	IC 16 BIT DATA BLOCK	P						
	004	01	15163525	7		1	PC	GATE ARR 1008 TIL POLL CONTRL	P						
	005	01	15163523	2		1	PC	GATE ARR 1008 TTL STATUS CONT	P						
	006	01	15163441	7		6	PC	IC 74LS641 OCTAL BUS XCEIVER	P						
	007	01	15145100	2		5	PC	IC 74LS04 HEX INVERTER	P						
	008	01	88881500	8		1	PC	IC 74156 DECODER TTL DUAL	P						
	009	01	15145400	6		6	PC	IC 74LS08 TTL QUAD 2 IN AND	P						
	010	01	15146300	7		11	PC	IC 74LS74 DUAL D-TYPE F/F	P						
	011	01	15144900	6		6	PC	IC 74LS00 QUAD 2-INPUT NAND	P						
	012	01	15148500	0		1	PC	IC74LS14 943LS TTL 6 ND RCVR	P						
	013	01	15163434	2		3	PC	IC 74LS373 OCTAL D LATCH	P						
	014	01	15147400	4		4	PC	IC 74LS138 DECODER 1 OF 8	P						
	015	01	15163324	5		1	PC	IC 74LS245 OCTAL BUS XCEIVER	P						
	016	01	15163734	5		1	PC	2K X 8 RAM 6116-120NS	P						
	017	01	15145600	1		3	PC	IC,74LS10 TRIPLE 3 INPUT NAND	P						
	018	01	15146200	9		5	PC	IC 74LS32 QUAD 2 INPUT OR	P						
	019	01	15163201	5		1	PC	IC Z80A MOS 8 BIT PROCESSOR	P						
	020	01	15164429	1		1	PC	IC Z80A-CTC SILICON GATE NMOS	P						
	021	01	15163418	5		1	PC	IC 74LS148 ENCODER 8-3LINE PR	P						

COPY 2

ASSEMBLY PARTS LIST

BUILD ARC 551

PRINT DATE	PAGE	FILE CHANGE NO.
11-19-84	2	1000 324

DIV.	ASSEMBLY NUMBER	CD	REV.	DWG.	DESCRIPTION	MC	STATUS	STATUS DATE	ENG. RESP.	FILE DATE
0620	22205770	5	A	D	PCB AY,STREAM TAPE ATTACH CD	S	REL	11-19-84	MICRO	11-19-84

T	FIND NO	LI	PART NUMBER	CD	M	QUANTITY	U/M	PART DESCRIPTION	MC	YLD	ECO. NO. IN	ECO. NO. OUT	S/N	WK IN	WK OUT
	022	02	15163433	4		2	PC	IC 74LS240 OCTAL BUFFER	P						
	023	01	15163322	9		1	PC	IC 74LS125	P						
	024	01	15163435	9		1	PC	IC 74276 QUAD J-K F-F	P						
	028	01	15163401	1		1	PC	IC 74LS280 PAR GEN/CKR 9 BIT	P						
	030	01	88885600	2		1	PC	IC 7437 210 TTL QD 2IN ND BFR	P						
	032	01	15163404	5		5	PC	IC 74LS374 OCTAL D-EDGE F-F	P						
	035	01	15163442	5		2	PC	IC TYPE 74LS640	P						
	036	01	51904101	6		1	PC	OSC TTL DIP 4.0MHZ 500MW	P						
	037	01	83452207	0		1	PC	SWITCH	P						
	038	01	96752414	1		6	PC	RES 10PIN SIP 3300 OHM 2P .8W	P						
	039	01	91938520	3		10	PC	RES 8SIP NTWK 220 R 2P 1.1W	P						
	040	01	91938528	6		1	PC	RES 8SIP NTWK 470 R 2P 1.1W	P						
	041	01	91938543	5		1	PC	RES SIP NTWK 2000 OHM	P						
	042	02	94402144	3		1	PC	RES FM 330 OHM 1/4W CARBON	P		DQ03194			8418	
	044	01	91938524	5		2	PC	RES MODULE 8 PIN 330 OHMS	P						
	045	01	94375102	4		2	PC	RES 8SIP NTWK 3300 R 3P 1.0W	P						
	048	01	24504371	6		3	PC	CAP FXD TANT 22UF 20P 15VDCW	P						
	049	01	19115400	4		18	PC	CAP .01 UF	P						
	050	01	51903800	4		1	PC	LED, S-S GAP RED 1.0MCD 180MW	P						
	051	01	91904638	3		1	PC	HEADER, SOLDER TAIL, 50 PIN	P						
	052	01	51918546	6		4	PC	CONN 24C AP929569	P						

COPY 2

ASSEMBLY PARTS LIST

BUILD ARC 551

PRINT DATE	PAGE	FILE CHANGE NO.
11-19-84	3	1000 324

DIV.	ASSEMBLY NUMBER	CD	REV.	DWG.	DESCRIPTION	MC	STATUS	STATUS DATE	ENG. RESP.	FILE DATE
0620	22205770	5	A	D	PCB AY,STREAM TAPE ATTACH CD	S	REL	11-19-84	MICRO	11-19-84

T	FIND NO	LI	PART NUMBER	CD	M	QUANTITY	U/M	PART DESCRIPTION	MC	YLD	ECO. NO. IN	ECO. NO. OUT	S/N	WK IN	WK OUT
	053	01	22242486	3		1	PC	FRAME AND TAPE ASSEMBLY	A						
	055	01	51903400	3		2	PC	PIN, .025 IN SQ PC MTG 2A	P						
	056	01	77612624	5		1	PC	CONNECTOR JUMPER	P						
	057	01	51848406	8		1	PC	SOCKET, IC 40 POS D-I-L TIN	P						
	058	01	51848405	0		1	PC	SOCKET, IC 28 POS D-I-L TIN	P						
	059	01	15185773	7		1	PC	SOCKET ZIF 28 POS	P						
	060	01	94966301	7		1	PC	PAD, MOUNTING IC	P						
	064	01	91938516	1		2	PC	RESISTOR,NTWK,7 RES,150 OHM	P						
	065	01	15145900	5		1	PC	IC 74LS20 DUAL 4-INPUT NAND	P						
	066	01	15163414	4		2	PC	IC 74LS244 OCTAL BFR 3-S OP	P						
	067	01	15163947	3		1	PC	ECC SUPPORT DEVICE	P						
	068	01	95393500	4		10	FT	WIRE HI TEMP APPLIANCE	P		DQ03266			8442	
	069	01	94850704	1		AR	PC	SEALANT, ADHESIVE	P		DQ03284			8444	
	070	01	22245229	4		2	PC	KEY,CONNECTOR,POLARIZING	P		DQ 3289			8446	
								0056 TOTAL LINES							

COPY 2

ABBREVIATIONS AND ACRONYMS A

Abbreviations and acronyms used in this book are as follows:

BOT	Beginning of tape
CPU	Central processor unit
CRC	Cyclical redundancy check
CS	Cycle steal
CSS	Cycle-steal status (command)
CSSW	Cycle-steal status word
DCB	Device control block
DMA	Direct memory access
DPC	Direct program control
ECC	Error condition code
EOT	End of tape
ESDI	Enhanced small disk interface
EW	Early warning
GCR	Group code recording
HDA	Head, disk, and actuator
I/O	Input/output
IBM	International Business Machines, Incorporated
ID	Identification
IDCB	Immediate device control block
IIB	Interrupt information byte
IPL	Initial program load
ISB	Interrupt status byte
LP	Load point
LSI	Large scale integration
LSR	Level status register
MB	Megabytes
MCHK	Machine check
MS	Microsecond
NRZ	Non return to zero
NRZI	Non-return to zero, change on one
PCB	Printed circuit board
POR	Power on reset

R/W	Read/write
RAM	Random access memory
RFM	Read file mark
ROM	Read only memory
WFM	Write file mark

GLOSSARY OF TERMS B

The following terms are used in this manual:

Azimuth	The angular deviation, in minutes of arc, of the mean flux transition line from the normal to the cartridge reference plane.
Bit	A single digit in the binary number system.
Bit cell	A length of magnetic recording tape within which the occurrence of a flux transition signifies a logical 1 bit, and the absence of a flux transition signifies a logical 0 bit.
Block	A group of 512 consecutive bytes transferred as a unit.
BOT	Beginning of tape marker indicating beginning-of-tape.
Byte	A group of 8 binary (10 GCR) bits operated on as a unit.
Cartridge	A 4-by-6-inch enclosure containing 6.30-mm (0.250-inch) wide magnetic tape wound on two coplanar hubs and driven by an internal belt which is coupled by an internal belt capstan to the external drive (reference ANSI X3.55-1977).
Cyclic redundancy check	A 2-byte code derived from information contained in the data block and block number byte and recorded after the data block and block number byte for read after write check and read only check.
Density	The maximum allowable flux transitions per unit length for a specific recording standard.
Early warning	A marker used to indicate the approaching end of the permissible recording area.
EOT	End-of-tape marker indicating end of tape.
Erase	The removal of all magnetically recorded information from the tape.
File mark	An identification mark following the last block in a file.
Flux transition	A point on the magnetic tape that exhibits maximum free space flux density normal to the tape surface.
Flux transition spacing	The distance on the magnetic tape between flux reversals.

Group code recording (GCR)	Data encoding method where a 4-bit group of data bits is encoded into a 5-bit group for recording on magnetic tape (reference ANSI X3.54-1976).
Load point	A marker used to indicate the beginning of the permissible recording area.
Magnetic tape	An oxide-coated mylar base tape capable of accepting and retaining magnetically recorded information.
Nibble	A group of 4 binary (5 GCR) bits operated on as a unit.
Postamble	Guard information recorded after the data block.
Preamble	Synchronization information recorded before the data block.
Recorded block	A group of consecutive bits comprising preamble, data block marker, data block, block number, CRC, and postamble.
Reference tape cartridge	A magnetic tape cartridge selected for a specific property to be used as a reference.
Re-tension	An operation that restores normal tension to the tape wound on cartridge hubs.
Streaming	A method of recording on magnetic tape where the tape is continuously moving and data blocks are continuously recorded.
Track	A recording strip parallel to the edge of the magnetic tape containing recorded information.
Underrun	A condition developed when the host transmits or receives data at a rate less than that required by the device for streaming operation.

OVERVIEW

This appendix describes the functions and use of the Event-Driven Executive (EDX) Utility Program. The appendix provides installation information, utility command information, and error message information.

The EDX utility program is a multipurpose, interactive program that performs data backup (SAVE) and retrieval (RESTORE) functions on a CDC 80810-10 Streaming Tape Cartridge Drive attached to a Series/1 computer. The program also performs tape maintenance functions. Table C-1 provides a brief list of the functions available with the utility program.

The utility program supports two versions of EDX: version 3 and version 4. CDC distributes both versions on a single diskette, part number 22242664.

TABLE C-1. UTILITY PROGRAM FUNCTIONS

Utility Function	Command	Description
SAVE	SD	Save a disk device on tape
	SV	Save a disk Volume on tape
	SM	Save disk Member(s) on tape
	SA	Save all datasets on a volume to tape
RESTORE	RD	Restore a disk device from tape
	RV	Restore a disk volume from tape
	RM	Restore disk member(s) from tape
	RA	Restore all datasets on a volume from tape
CONTROL	LI	List tape files
	ER	Erase the tape
	TN	Re-tension the tape
	VF	Verify the tape (READ test)
	CF	Certify the tape (WRITE / READ test)
	EX	Executes commands from a dataset
	DA	Change tape device address
	EN	Exit the tape utility

INSTALLATION INFORMATION

You can install the utility program at any Series/1 site that meets the software and hardware requirements listed in this subsection.

INSTALLATION REQUIREMENTS

The utility executes only under the IBM EDX Version 3 or above operating systems for IBM Series/1 computers. The utility requires the following minimum hardware configuration:

- IBM Series/1 processor with 128 KBytes
- Any operator station supported by the EDX operating system
- A system disk supported by the EDX operating system
- A diskette unit supported by the EDX operating system software required for installation of the utility. (The utility is distributed on a diskette.)
- A CDC 80810-10 Streaming Tape Cartridge Drive

The EDX system members TPSAVE and TPREST must reside on the EDX system IPL volume. If the members do not reside on the IPL system, the EX command can not execute the save and restore functions when the Tapecopy program initiates the function execution.

INSTALLATION PROCEDURE

Installation of the utility program include generating an IBM EDX V3 or V4 system to support the program, copying the program to the EDX V3 or above system disk or diskette and loading the program. The following procedure provides an overview of the utility installation:

NOTE

For clarity, all software prompts in this appendix are in uppercase letters, while all user entries are in lowercase letters. However, the EDX utility recognizes uppercase letters and lowercase letters.

1. Copy the CDC Tapecopy program V1M0 or its members (TPSAVE and TPRESTORE) to the IPL volume, using the IBM program $COPYUT1.
2. Load the CDC program from the IPL volume.
3. Enter any command listed under the HELP command discussion in this appendix. After the completion of command execution, the utility issues a prompt for another command.

Generate EDX V3 or V4 System to Support CDC EDX Tapecopy V1M0

Generate an EDX V3 or V4 system, supporting the CDC EDX Tapecopy Program V1M0. This system generation modifies members $EDXDEF and LINKCNTL on volume EDX002 to support the cartridge tape as an EXIO device.

$EDXDEF on volume EDX002 must define the cartridge tape as an EXIO device. Figure C-1 is an example of the changes to member $EDXDEF of Version 4 that are needed to support the cartridge tape.

LINKCNTL on volume EDX002 must include support for the EXIO device. Figure C-2 is an example of the changes to member LINKCNTL on volume EDX002 to support the cartridge tape as an EXIO device.

```
$EDXDEF   CSECT
          $ID
*
*                      XPS
*               EVENT DRIVEN EXECUTIVE
*            VERSION 4, MODIFICATION LEVEL 0
*


     SYSTEM MAXPROG=(5,5,5,5),PARTS=(32,32,32,32)
     *
     *
     DISK   DEVICE=4964,ADDRESS=02
     EXIODEV ADDRESS=4C,RSB=12,MAXDCB=2,END=YES   ***CARTRIDGE TAPE**
```

Figure C-1. EDX002 Member $EDXDEF Change to Support CDC EDX Tapecopy V1M0

```
     *
     *
     * ------------------------------------------------------
     *   EXIO SUPPORT            - MUST BE IN PARTITION 1
     * ------------------------------------------------------
       INCLUDE IOSEXIO           *3*   EXIO DEVICE CONTROL SUPPORT
       INCLUDE EXIOTRC           *3*   EXIO TRACE OPTION
     *
     *
```

Figure C-2. EDX002 Member LINKCNTL Change to Support CDC EDX Tapecopy V1M0

Copy the Program to the IPL Volume

Copy the CDC Tapecopy programs from the diskette (on which the utility was shipped) with the IBM COPYUT1 program.

1. Place the diskette in the diskette unit. Enter the following text to invoke the IBM $COPYUT1 program:

   ```
   $L $COPYUT1
   ```

2. The system issues the following prompts, to which you enter the responses appropriate for your site. The source is the volume on which the CDC Tapecopy programs currently reside.

```
THE DEFINED SOURCE IS EDX002 OK(Y/N)?  n
```

3. Enter Y if the defined source specified by the prompt is the actual source. Enter N if the defined source specified by the prompt is not the actual source.

4. If your response is N or NO, the system prompts for the actual (new) source.

```
ENTER NEW SOURCE VOLUME:  cdc
```

5. After you respond with the actual (new) source, the system prompts for the target volume. The target volume is the volume to which the Tapecopy utility is to be copied.

```
THE DEFINED TARGET VOLUME IS EDX002 OK (Y/N)?  y
```

6. Enter N if the prompt does not specify the actual target volume. If the response is N, the system prompts for the actual (new) target volume.

   Enter Y if the prompt specifies the actual target volume. If the response is Y, the system prompts for verification of the source and target volumes as follows:

```
MEMBER WILL BE COPIED FROM CDC TO EDX002 OK(Y/N)?  y
```

   Enter Y if the source and target volumes specified in the prompt are correct. Enter N if either the source or target volume(s) specified in the prompt are not correct. If the response is N, the system prompts again for the source and target volume.

7. The system next prompts for the command to be executed:

```
COMMAND(?):  call
```

   The response specifies the IBM copy option is to copy all of the contents of the diskette on which the Tapecopy utlity was distributed. For installation purposes, respond to the ? prompt as shown.

8. The system identifies which utility datasets were copied and prompts for the next command to execute:

```
TAPECOPY COPIED
TPSAVE COPIED
TPREST COPIED
COMMAND (?):
```

9. End the copy utility by replying as follows to the command prompt:

```
COMMAND (?):en
$COPYUT1 ENDED
```

Load the Utility From the IPL Volume

You can load the Tapecopy utility from the IPL volume in one of three ways, depending upon what you want the utility to do. Which of the following ways you want to execute:

- Save and restore functions?
- Save or restore functions with one or more control functions?
- Save functions only?
- Restore functions only?

The recommended procedure is to load the Tapecopy utility from the IPL volume. Loading the Tapecopy utility ensures that all utility functions are available for your use at any time during utility execution. Loading the Tapecopy utility allows you to execute both save and/or restore functions as well as any control functions that you might need.

An alternate procedure is to load only the TPSAVE (save operations) or TPREST (restore operations) programs. This means, of course, that you can execute only the loaded functions.

Load the CDC program from the IPL volume as follows:

1. Enter one of the following command strings, as appropriate:

$L TAPECOPY	(loads the Tapecopy utility from the IPL volume)
$L TPSAVE	(loads only the program that executes the save functions)
$L TPRESTORE	(loads only the program that executes the restore functions)

2. The system responds with the following prompt:

```
CDC CARTRIDGE TAPE UTILITY PROGRAM V1M0
COPYRIGHT, CONTROL DATA CORPORATION, 1984

COMMAND (?):
```

HELP COMMAND (?)

The ? command requests a display of the EDX utility command menu. The menu lists and describes each command.

3. Enter the device address of the source disk. The utility issues an informational message while searching for a blank tape. After finding a blank tape, the utility prompts for verification of the source disk device address and target tape cartridge savename as follows:

```
SEARCHING FOR BLANK TAPE
SAVE DEVICE ADDRESS #### USING SAVENAME XXXXXXXX OK? (Y/N):
```

4. Enter N or NO if the prompt information is not correct. The utility returns to the command prompt.

   Enter Y or YES if the source disk and target tape cartridge information in the prompt is correct.

   When beginning execution of the SD command, the utility issues the following message:

```
DEVICE SAVE STARTED
```

   After saving the disk contents, the utility issues the following message:

```
DEVICE SAVE COMPLETED - XXXX RECORDS SAVED
```

5. Press the PF1 key to check command progress during SD command execution. Note that checking the progress of command execution interrupts streaming.

Save Contents of a Disk Volume to Tape (SV)

The SV option saves the contents of a disk volume to cartridge tape. To use the SV option proceed as follows:

1. The utility prompts for the command. Enter the SV command. The utility then prompts for the name (savename) under which the contents of the disk volume are to be saved on the tape cartridge as follows:

```
COMMAND (?): sv
ENTER SAVENAME:
```

2. Enter the savename. The utility then prompts for the name of the disk volume (VOLUME) to be saved as follows:

```
ENTER SAVENAME: volone
ENTER VOLUME:
```

3. Enter the name of the source disk volume. The utility prompts for verification of the savename on the target tape cartridge and source disk volume name as follows:

```
SEARCHING FOR BLANK TAPE
SAVE VOLUME XXXX USING SAVENAME XXXXXXXX OK (Y/N)?
```

4. Enter Y or YES if the source disk and target tape information in the prompt are correct.

   Enter N or NO if either the source disk and/or target tape are not correct. If the response is N or NO, the utility returns to the command prompt.

5. When beginning execution of the SV command, the utility issues the following message:

   ```
   VOLUME SAVE STARTED
   ```

6. Press the PF1 key to track the progress of the save operation. Note that checking the progress of command execution interrupts streaming.

   If the utility detects the end of a tape during execution of the SV option, the utility issues the prompt discussed in the earlier subsection, Using Multiple Tape Cartridges. Refer to the earlier subsection.

7. After saving the volume, the utility issues the following message:

   ```
   VOLUME SAVE COMPLETED  XXXX RECORDS SAVED
   ```

Save Datasets From Disk to Tape (SM)

The SM option saves selected datasets on a disk volume to a tape cartridge. To use the option, proceed as follows:

1. The utility prompts for the command. Enter the SM command. The utility then prompts for the name of the source disk volume on which the dataset(s) to be saved currently reside.

   ```
   COMMAND (?): sm
   ENTER SAVENAME:
   ```

2. Enter the name (savename) under which the datasets will be saved on the target tape cartridge. The utility then prompts for the name of the disk volume (volume) on which the datasets currently reside as follows:

   ```
   ENTER SAVENAME: volone
   ENTER VOLUME:
   ```

3. Enter the name of the disk volume. The utility then prompts for the name(s) of the datasets to be saved as follows:

   ```
   ENTER VOLUME: sav3
   ENTER DATASET(S) SEPARATED BY SPACES:
   ```

4. Enter the name(s) of the dataset(s) that you want to save. To save a single dataset, enter the single dataset name. To save several datasets, enter the dataset names, separated by spaces, as follows:

```
bkptest dsone dstwo ds3 test dskfile tapefile copyd@ copyd3
```

To save all datasets with a specific prefix, enter the prefix followed by enough question marks to create an eight-character name. Note that question mark (?) is a placeholder, as shown by the following three prefix examples:

```
tes????? ???sortp my?sortp
```

5. The utility prompts for datasets until you enter a blank line. (Depending upon your input device, a carriage return may create a blank line.) A blank line signifies that all datasets you want save are identified.

After recognizing a blank line, the utility searches for a blank tape and issues an information message. After detecting a blank tape, the utility prompts you to verify the name (savename) under which you want the datasets saved as follows:

```
(blank line)
SEARCHING FOR BLANK TAPE XXXX
SAVE DATASET(S) USING SAVENAME XXXXXXXX OK? (Y/N):
```

6. Enter Y or YES if the savename is correct.

Enter N or NO if the savename is not correct. If the response is N or NO, the utility returns to the command prompt.

7. As the SM option executes, the utility identifies each dataset as the dataset is saved.

If the utility detects the end of a tape during execution of the SM option, the utility issues the prompt discussed in the earlier subsection, Using Multiple Tape Cartridges. Refer to the earlier subsection.

After execution completion, the utility issues the following message.

```
SAVE COMPLETED XXXX DATASETS SAVED
```

Save All Datasets on a Disk Volume to Tape (SA)

The SA option saves all datasets on a source disk volume to a tape cartridge. Using the SA option is very similar to using the SM option.

To use the SA option, proceed as follows:

1. The utility prompts for the command. Enter the SA command. The utility then prompts for the target tape cartridge (SAVENAME) to which the dataset(s) are to be saved:

```
COMMAND: sa
ENTER SAVENAME
```

2. Enter the name under which the datasets you want saved on the tape cartridge. The utility then prompts for the name of the source disk volume (VOLUME) on which the datasets currently reside:

```
ENTER SAVENAME: asmsav
ENTER VOLUME: asmlib
```

3. Enter the name of the disk volume. The utility prompts for verification that the source disk volume and the target tape cartridge are correct as follows:

```
SAVE DATASETS USING SAVENAME XXXXXXXX OK? (Y/N):
```

4. Enter Y or YES if the target tape savename is correct.

   Enter N or NO if the target tape savename is not correct. If the response is N or NO, the utility returns to the prompts for the correct source disk volume and the target tape cartridge.

   If the utility detects the end of a tape during execution of the SA option command, the utility issues the prompt discussed in the earlier subsection, Using Multiple Tape Cartridges. Refer to the earlier subsection.

   After execution, the utility issues the following message:

```
SAVE COMPLETED  XXXX DATASETS SAVED
```

RESTORE COMMAND

The RESTORE command allows the restoration of data from a tape cartridge to a disk device. The restored data was previously SAVEd on the tape cartridge. You can restore the data at the device, volume, or selected dataset level.

RESTRICTIONS

The system should not be executing any other tasks when executing the RESTORE command. The user runs the following risks when executing the RESTORE command task while executing other tasks:

- The time required to execute a RESTORE task may be unnecessarily long if executed while other tasks are executing. The streaming process may be interrupted.
- The other executing tasks may be modifying the data to be RESTOREd by the RESTORE task.

After entering any RESTORE command option, the utility issues the following warning:

```
          ***WARNING***
NO OTHER PROGRAMS SHOULD BE RUNNING
TO ENSURE A VALID RESTORE.
```

OPTIONS

The RESTORE command has the following options, which are discussed in this subsection:

- Restore contents of a device to disk
- Restore contents of a volume to disk
- Restore selected datasets to disk
- Restore all datasets from a specified volume to disk

Restore Contents of a Device to Disk (RD)

The RD option restores the complete contents of a saved disk device to the disk. To use the option, proceed as follows:

1. The utility prompts for the command. Enter the RD command. The utility then prompts for the name under which the device contents was saved:

   ```
   COMMAND(?): rd
   ENTER SAVENAME:
   ```

2. Enter the savename under which the contents of the device was saved on the tape cartridge. The utility responds with a message identifying the savename for which the utility is searching. The utility issues an informational message after finding the savename as follows:

   ```
   ENTER SAVENAME: sav2
   SEARCHNG FOR SAVENAME SAV2
   SAVENAME FOUND
   ```

3. The utility then prompts for verification of the target device address and the source savename:

   ```
   RESTORE TO DEVICE ADDRESS XX USING SAVENAME XXXX, OK? (Y/N):
   ```

4. Enter Y or YES if the target device address and the source savename information in the utility prompt are correct.

   Enter N or NO if the target device address or the source savename information in the utility prompt is not correct. If the response is N or NO, the utility prompts for a different device address as follows:

   ```
   ENTER DEVICE ADDRESS IN HEX: xx
   ```

5. Enter the correct device address. The utility then prompts for verification of the target device address.

```
RESTORE TO DEVICE ADDRESS XX USING SAVENAME XXXX, OK? (Y/N):
```

6. Enter Y or YES if the target device address and the source savename are correct.

7. When the response to the device address and savename verification prompt is Y or YES, the utility issues the following message:

```
DEVICE RESTORE STARTED
```

8. When all records have been restored to the target device(s), the utility issues the following message:

```
DEVICE RESTORE COMPLETED.  XXXX RECORDS RESTORED.
```

Restore Contents of a Volume to Disk (RV)

The RV option restores the contents of a specific volume from the tape cartridge to a disk device. To use the option, proceed as follows:

1. The utility prompts for the command. Enter the RV command. The utility prompts for the name of the tape cartridge (savename) to which the volume to be restored was saved as follows:

```
COMMAND(?): rv
ENTER SAVENAME:
```

2. Enter the name (savename) under which the contents of the disk was saved on the tape cartridge. The utility responds with a message identifying the savename for which the utility is searching. The utility issues an informational message after finding the savename as follows:

```
ENTER SAVENAME: sav2
SEARCHING FOR SAVENAME SAV2
SAVENAME FOUND
```

3. The utility then prompts for confirmation of the volume that you want restored and the name under which the volume to be restored currently resides (savename) as follows:

```
RESTORE VOLUME XXXXX USING SAVENAME SAV2 OK? (Y/N)
```

4. Enter Y or YES if the prompt identifies the correct source savename and the target disk volume for the RESTORE option.

   Enter N or NO if the prompt does not identify the correct source savename and the target disk volume for the RESTORE option. If the response is N or NO, the utility returns to the command prompt.

5. If the utility detects the end of a tape during execution of the RV option command, the utility issues the prompt discussed in the earlier subsection, Using Multiple Tape Cartridges. Refer to the earlier subsection.

6. After restoring the specified volume to disk, the utility issues the following message:

```
VOLUME RESTORE COMPLETED.  XXXX RECORDS RESTORED.
```

Restore Selected Dataset(s) to Disk (RM)

The RM option restores specific dataset(s) from the cartridge tape to the disk device. The option restores a single dataset, multiple datasets, or datasets with a specific prefix. To use the option, proceed as follows:

1. The utility prompts for the command. Enter the RM command. The utility prompts for the name on the source tape cartridge (savename) under which the data to be restored currently resides as follows:

```
COMMAND (?):rm
ENTER SAVENAME:
```

2. Enter the savename under which the dataset(s) currently reside. The utility responds with the savename for which the utility is searching. The utility then prompts you to verify the name (volume) of the source tape cartridge to be restored as follows:

```
ENTER SAVENAME: tape01
SEARCHING FOR SAVENAME TAPE01
RESTORE TO VOLUME TAPE01 OK (Y/N)?:
```

3. Enter Y or YES if the prompt identifies the correct target volume for the RESTORE option.

   Enter N or NO if the prompt does not identify the correct target volume for the RESTORE option.

4. If your response is N or NO, enter the name of the disk volume to which you want the dataset(s) restored. The utility then prompts for the names of the dataset(s) to be restored to the disk device as follows:

```
ENTER DATASET(S) SEPARATED BY SPACES
```

5. Enter the name(s) of the dataset(s) you want restored. You can restore a single dataset or multiple datasets in one execution.

   To restore only one dataset, enter a single dataset name. To restore multiple datasets, enter the dataset names, separated by spaces.

```
dsone dstwo dsthree test dskfile tapefile copy02 copyd1 abc
```

To restore datasets with a specific prefix, enter only the applicable prefix, followed by enough question marks to create an eight-character dataset name. Note that a question mark (?) is a placeholder, as shown by the following three prefix examples:

```
tes????? ???sortp my?sortp
```

6. The utility prompts for datasets until you enter a blank line. (Depending upon your input device, a carriage return may create a blank line.) A blank line signifies that all datasets you want saved are identified.

   After recognizing a blank line, the utility prompts for verification of the savename under which the datasets to be restored currently reside, and the target volume to which the datasets are to be restored.

   ```
   RESTORE DATASETS TO VOLUME XXXX USING SAVENAME XXXXX OK? (Y/N):
   ```

7. Enter N or NO if the prompt does not identify the correct source tape cartridge of the dataset(s) to be restored. The utility then returns to the command prompt.

   Enter Y or YES if the prompt identifies the correct source tape cartridge of the dataset(s) to be restored.

8. If the utility detects the end of a tape during execution of the RM option command, the utility issues the prompt discussed in the earlier subsection, Using Multiple Tape Cartridges. Refer to the earlier subsection.

9. After restoring the specified dataset(s), the utility issues the following message:

   ```
   RESTORE COMPLETED.  XXX DATASETS RESTORED
   ```

Restore All Datasets on a Volume (RA)

The RA option restores all datasets from a tape cartridge to a specific volume on a disk device. To use the option, proceed as follows:

1. The utility prompts for the command. Enter the RA command. The utility then prompts for the name of the source tape cartridge on which the datasets currently reside as follows:

   ```
   COMMAND (?): ra
   ENTER SAVENAME:
   ```

2. Enter the name under which the datasets reside on the source tape cartridge. The utility issues an informational message while searching for the tape cartridge. The utility then prompts for verification of the source tape cartridge name as follows:

   ```
   ENTER SAVENAME: sav3
   SEARCHING FOR SAVENAME SAV3
   RESTORE TO VOLUME SAV3 OK (Y/N)?:
   ```

3. Enter Y or YES if the prompt identifies the correct source tape cartridge for the RESTORE option.

   Enter N or NO if the prompt does not identify the correct source tape cartridge for the RESTORE option. If the response is N or NO, the utility returns to the prompt for the correct source tape cartridge.

4. The utility prompts for the name of the disk volume to which the datasets are to be restored as follows:

   ```
   ENTER VOLUME:
   ```

5. Enter the name of the volume to which the datasets are to be restored. The utility prompts for verification that the target disk volume is correct as follows:

   ```
   ENTER VOLUME: asmlib
   RESTORE DATASETS TO VOLUME XXXX USING SAVENAME XXXX OK? (Y/N):
   ```

6. If your response is N or NO, the utility returns to the prompts for the correct source tape cartridge and the target disk volume.

7. Enter Y or YES if the source tape cartridge name and the target volume are correct.

8. The utility displays the name of each restored dataset as the restore all option executes.

9. If the utility detects the end of a tape during execution of the RM option command, the utility issues the prompt discussed in the earlier subsection, Using Multiple Tape Cartridges. Refer to the earlier subsection.

10. After restoring the dataset(s), the utility issues the following message:

    ```
    RESTORE COMPLETED.  XXX DATASETS RESTORED
    ```

11. To stop command execution, respond with N or NO to the continuation prompt. The utility then returns to the command prompt and issues the following message:

    ```
    DEVICE/VOLUME/DATASET NOT RESTORED
    ```

LIST COMMAND

The LIST command displays information about the tape currently in the tape cartridge drive. The command displays the following information:

- Tape savename, the name under which the data was saved on the tape.
- Segment number, the sequence number of the tape. The segment number, in parenthesis, identifies the sequence of the tape in a series of tapes containing a single file, or volume, or device.
- Device address, the address of the device whose contents was saved on the tape (if the device contents was saved with a SD command).
- Volume name, the name of the volume whose contents was saved on the tape (if the device contents was saved with a SV, SA, or SM command).
- Dataset name(s), the names of the dataset(s) saved on the tape (if the device contents was saved with an SA or SM command).

OPTIONS

To use the LIST command, proceed as follows:

1. The utility displays the tape savename and issues a prompt as follows:

```
COMMAND(?): li
ENTER SAVENAME (DEFAULT IS LIST ALL):
ENTER LIST DEVICE NAME (DEFAULT IS YOUR TERMINAL):
```

2. Enter the savename if a search is to be made for a specific savename. Press the ENTER key to display the information on your terminal (default), or enter the name of the print device to which the information should be routed. The utility issues the following message:

```
***WAIT ... LIST IN PROGRESS***
```

3. The utility displays the savename and the date you saved the data. The utility also prompts you to continue execution as follows:

```
SAVE-NAME: CART(1)
SAVE DATE: 02-20-84 TIME 3.00
DISPLAY THE CONTENTS? (Y/N):
```

   If the save was a device save, the utility displays a directory listing of the source disk device on which the saved data resided.

4. Enter Y or YES to continue utility execution. If response is Y or YES, the utility issues the following information, depending upon the type of save previously executed:

```
DEVICE ADDR          SIZE
   03              56000
```

If the save was a volume save, the utility displays a directory listing the volume on which the saved data resided and the amount of data saved as follows:

```
VOLUME               SIZE
EDX002             100000
```

5. The utility asks whether you want to display the contents of the save. If the save was a dataset save or save all (save a specific member or save all members), the utility then lists all the dataset members, with the size (number of records) of each dataset. The utility also identifies whether the saved data contained data or was a program. After displaying the requested information, the utility prompts you to continue execution as follows:

```
DATASETS             SIZE
TYPE
TEST1              10000
DATA
TEST2              50000
DATA
$TEST                200
PGM

NUMBER OF DATASETS ON CART(1):  3

DO YOU WISH TO CONTINUE? (Y/N):
```

ERASE COMMAND (ER)

The ERASE command erases the tape, completely destroying all data on the tape. You should use the command only when you no longer need the information or you have backed up the information to another tape or disk.

CAUTION

The ERASE command destroys all data on the tape.

OPTIONS

1. To use the ERASE command, proceed as follows:

```
COMMAND(?): er
*** WARNING !!! ERASE WILL DESTROY ALL DATA ON THE TAPE ***
DO YOU WISH TO CONTINUE? (Y/N):
```

2. Enter N or NO to halt execution of the ERASE command. The utility returns to the command prompt.

   Enter Y or YES to continue execution of the ERASE command. The utility issues an informatonal message during execution of the ERASE command:

```
***WAIT ... ERASE IN PROGRESS***
```

3. After the tape is completely erased, the utility issues the following message and returns to the option menu:

```
***  ERASE COMPLETE  ***
COMMAND (?):
```

TENSION COMMAND (TN)

The TENSION command winds the tape to equalize tape tension throughout the entire cartridge. Use the command on a new tape or on a tape that has been stored for a long time.

OPTIONS

To use the TENSION command, proceed as follows:

1. Enter the option command. The utility issues an information message as follows:

```
COMMAND (?): tn
****  WAIT  ... RETENSION IN PROGRESS ****
```

2. The utility issues the following message and returns to the command prompt when RETENSION completes execution:

```
***  RETENSION COMPLETED***
COMMAND (?):
```

VERIFY COMMAND (VF)

The VF command verifies the readability of a tape cartridge. The command confirms the existence of data on the tape and that the data can be read without error. Execute the command on a used tape cartridge. Because the command does not destroy data, there is no need to back up the data before verifying the tape.

OPTIONS

To use the VF command option proceed as follows:

1. Enter the option command. The utility issues the following information message:

```
COMMAND (?): vf
*** WAIT ... VERIFY IN PROGRESS ***
```

2. Press the ATTN key or enter ca to halt command execution.

   The verify operation requires approximately 12 minutes of execution time.

3. The utility issues the following message and returns to the command prompt upon successful command completion:

```
***  VERIFY COMPLETE ***
nnnnnn BLOCKS VERIFIED nnnnn MARGINAL BLOCKS
```

   Marginal blocks are tape data blocks the utility failed to read properly at least once but did read after one or two retries.

CERTIFY COMMAND (CF)

The CF command verifies that you can write to and read from a tape successfully. The control function does this by erasing the contents of the tape and writing a worst-case data pattern on the tape.

You should use the CF command only on a new tape or on a tape on which you have detected read or write problems.

CAUTION

This command destroys existing data on a tape.

OPTIONS

Use the CERTIFY option as follows:

1. Enter the option command. The utility issues an information message and asks whether option execution should continue as follows:

```
COMMAND (?): cf
*** WARNING  !!!  CERTIFY WILL DESTROY ALL DATA ON THE TAPE ***
DO YOU WISH TO CONTINUE (Y/N):
```

2. Enter N or NO to prevent execution of the CERTIFY command. The utility displays the utility command prompt.

   Enter Y or YES to continue execution of the CERTIFY command.

3. The utility certifies the tape by writing a worst-case data pattern on the tape and reading the written data.

4. The utility asks whether a read verify operation should be done after completing the CERTIFY operation:

```
READ VERIFY AFTER CERTIFY? (Y/N):
```

5. Enter N or NO to certify with error checking during the write operation only.

   Enter Y or YES to certify with error checking during the write operation, followed by a read operation to verify the condition of the tape.

   The CERTIFY operation requires about 12 minutes of execution time. The CERTIFY with READ VERIFY operation requires about 25 minutes of execution time.

6. The utility issues the following informational message during execution of the CERTIFY operation:

```
***...CERTIFY IN PROGRESS ***
```

7. Press the ATTN key or enter ca to halt the command execution at any time during execution of the certify and verify functions.

8. After the utility writes the entire tape with the CERTIFY pattern, the utility issues the following informational message:

```
***CERTIFY COMPLETE***
nnnnnn BLOCKS CERTIFIED     nnnnn MARGINAL BLOCK(S)
REWINDING TAPE ...
```

9. If the READ VERIFY operation is executed after the CERTIFY operation, the utility then issues the following informational messages:

```
***WAIT ...VERIFY IN PROGRESS ***
nnnnnn BLOCKS VERIFIED nnnnn MARGINAL BLOCK(S)
REWINDING TAPE ...
```

10. After completing the CERTIFY operation or the VERIFY operation (if requested), the utility issues the following informational message:

```
***WAIT ... ERASE IN PROGRESS***
```

11. After completing the erase function, the utility returns to the COMMAND prompt.

Refer to the Errors subsection for a list of the error messages generated by the utility.

EXECUTE COMMAND (EX)

The EX command allows execution of EDX utility commands with a minimuim of operator intervention. A dataset, created with $FSEDIT, contains the utility commands. You can invoke this dataset using the EX command, either directly or indirectly through the EDX job utility.

The EX command processes each EDX utility command the same way, regardless of whether the EX command is invoked directly or indirectly. The EX command reads each line of the dataset, displays each line on the attached terminal, and executes each line as a utility command.

Consider the following syntax rules when creating the datasets with $FSEDIT:

- Begin each Tapecopy command in position 1.
- Begin the savename in column 4 or any column after column 4.
- Separate the savename(s) and/or volumes with either space(s), (any number), or commas.
- Use the EN command to identify the end of the dataset to be executed with the EX command.
- The SV and VF commands require savename and volume informaton.
- The LI command defaults to the input terminal for the output device for the requested listings unless you specify an output device ID.

OPTIONS

The EX command has the following execution options:

- Execute EX command indirectly through the EDX job utility
- Execute EX command directly

Execute EX Command Through EDX Job Utility

You can invoke the EX command indirectly through the EDX job utility $JOBUTIL. To use this method, use $FSEDIT to create two datasets. The first dataset contains the EDX utility commands. The second dataset contains the $JOBUTIL instructions, which will open and execute the first dataset.

After entering the LOAD command, the following events occur:

- Tapecopy program automatically loads.
- The dataset that contains the EDX utility commands (EXFILE) opens, and the EDX utility commands execute.
- Control passes to the job and the job utility file when all EDX utility commands have executed.
- Job utility file passes control to another program if one is present in the job stream, or ends execution if no other programs are present in the job stream.

TAPECOPY issues the following condition codes after execution. Use these condition codes and the JUMP TO label ON CONDITION to bypass selected programs in the job stream or to conditionally abort job utility execution.

Condition Code Value	Condition Code Meaning
-1	EX file execution successful
≠1	EX file execution failed

Dataset EXFILE created with $FSEDIT, for example, contains EDX utility commands. The dataset resides on volume EDX002. Use $FSEDIT to create a dataset of job utility instructions, as follows:

```
PROGRAM   TAPECOPY,EDX002
PARM      EXFILE,EDX002       (Dataset name and volume of file containing
EXEC                          EDX utility commands)
EOJ                           (End of job)
```

Save the job utility dataset under any name, residing on any volume, as the following example illustrates:

```
Dataset name of job utility instruction:     TAPEJOB
Volume on which dataset resides:             BACK04
```

Execute the job utility as follows, using the IBM LOAD command to load the TAPECOPY program and the dataset:

```
$L $JOBUTIL TAPEJOB,BACK04
```

TAPECOPY loads automatically. Dataset EXFILE on EDX002 automatically opens. The EDX utility commands execute. After EXFILE completes execution, control passss to the job and the job utility file. The job and the job utility file then ends execution because the job stream contains no other jobs. TAPECOPY issues a condition code, as previously discussed.

Execute EX Command Directly

You can invoke the EX command directly with a prompt/response event sequence similar to that used with the other EDX utility command. With this method, create the dataset of EDX utility commands with $FSEDIT. Then execute this dataset by invoking the EX command in response to an EDX utility prompt. The following example illustrates this method of using the EDX utility command.

For example, assume a dataset (with a DSNAME of DAILY, resides on a volume ADMIN) contains a series of SD (save dataset(s)) commands. You could execute the series of SD commands with the following command/prompt responses:

```
COMMAND (?): ex
ENTER DATASET (NAME,VOLUME): daily,admin
EXECUTE FROM DATA SET DAILY ON VOLUME ADMIN? (Y/N)
```

Note the entry of the dataset name (DAILY) and the volume serial (ADMIN) on which the dataset resides.

Enter Y or YES to execute the commands on the dataset. The utility displays the commands as the commands execute.

Enter N or NO to halt command execution and return to the command prompt.

The following examples illustrate the use of the EX utility command directly:

1. Save volume contents daily

   Assume you daily save the contents of the volume EXTEST1 to the volume USER03, and list the saved contents to the operator terminal. You also daily save the volume EXTEST3 to volume BRUCE and list the saved contents to the system printer.

   You could create an EX dataset with this information, allowing you to save the contents of the volumes in the example with only one command entry.

You could create the following EX dataset under the name DAILY on the volume MAINT:

```
SV EXTEST1 USER03                                                    00000031
LI                                                                   00000032
SV EXTEST3 BRUCE                                                     00000033
LI   $SYSPRTR                                                        00000034
EN                                                                   00000041
```

The following prompt/response sequence causes execution of the two save and list operations in the sequence specified in the dataset:

```
COMMAND (?): ex
ENTER DATASET (NAME,VOLUME): DAILY,MAINT
EXECUTE FROM DATA SET DAILY ON VOLUME MAINT? (Y/N): y
```

The EX command causes the execution of the two save and list operations in the order listed.

2. Backup of specific members from one volume to another volume

Assume that on a monthly basis you back up specific members of two volumes to two other volumes, save the entire contents (including the directory) of one volume to another volume, save all the members of one volume to another volume, and list the contents of the saved volumes to the system printer.

You could create an EX dataset with this information, allowing you to do the saves with only one command entry.

You could create the following EX dataset under the name MONTHLY on the volume MAINT:

```
SM  EDXVOL   EDX002                                                  00000001
    RON?????   ALLTERM  BLACK    IPL     ROMUT3  REPLACE  MERGE    00000031
    DDW        DIAGUT   CHECKER  PAUSE   BAT     BIGSIGN  SLATMMD  00000032
    $DISKUT4   FLOPCOPY TAPECOPY TPREST  TPSAVE                    00000033
SA  RONVOL   RON                                                    00000035
SM  DEANVOL                                                         00000038
    DPOSUTS    LDELAY   DUNUT1S TEKCOM  SIGNIM1 SIGNIM2            00000041
SV  MACVOL   USER03                                                 00000045
LI  $SYSPRTR                                                        00000048
EN                                                                  00000050
```

The following prompt/response sequence would cause execution of the four save operations and one list operation in the sequence specified in the dataset:

```
COMMAND (?): ex
ENTER DATASET (NAME,VOLUME): MONTHLY,MAINT
EXECUTE FROM DATA SET DAILY ON VOLUME MAINT? (Y/N): y
```

The EX command causes the execution of the four save operations and one list operation in the order listed.

DEVICE ADDRESS COMMAND (DA)

The DA command enables changing the preset tape device address of hexadecimal 4C to a different tape device address.

To use the DA option, proceed as follows:

1. The utility prompts for the command input. After receiving your response, the utility identifies the current address of the tape device and prompts for the new tape device address:

   ```
   COMMAND (?): da
   CURRENT TAPE DEVICE ADDRESS IS 4C
   ENTER DEVICE ADDRESS IN HEX:
   ```

2. To keep the current tape device address, press the ENTER key. The current tape device address does not change.

3. To change the current tape device address, enter a two-digit hexadecimal device address and press the ENTER key. The current tape device address will change to the new value.

4. The utility issues the command input prompt.

END COMMAND (EN)

The EN command terminates EDX utility execution.

OPTIONS

To use the EN option proceed as follows:

```
COMMAND (?): en
```

Entering the EN command causes Series/1 to exit from the EDX utility.

ERROR MESSAGES

The EDX utility issues the following error messages, as appropriate, when the utility detects an error condition:

DATA SET NOT FOUND

Explanation: While trying either to save disk member(s) on tape or to restore disk member(s) from tape, the tape cartridge drive could not find the specified dataset(s). If the executed command option was SM, the dataset(s) could not be found on the specified disk. If the executed command option was RM, the dataset(s) could not be found on the specified tape.

User response: Specify either the correct dataset or the disk or tape number.

DEVICE ADDRESS NOT FOUND

Explanation: The EDX operating system does not have a disk device attached to device address XX. The command options to save a disk device on tape and to restore a disk device from tape require a hexadecimal device address.

User response: Specify the correct device address.

DISK NOT INITIALIZED. CANNOT SAVE.

Explanation: The utility tried to save the contents of a disk device to tape; however, the disk device was not initialized.

User response: Refer to the IBM manuals explaining the disk initialization utility $INITDSK.

DISK READ ERROR

Explanation: The tape cartridge drive detected an error during a read operation.

User response: Check the disk.

DISK TOO SMALL FOR RESTORE

Explanation: The utility tried to restore a disk from tape, using the RD command option; however, the disk was too small to restore from tape. The utility also issues the following record counts:

```
TAPE RECORD COUNT = XXXX
DISK RECORD COUNT = XXXX
```

User response: Specify a disk with more available space.

DISK WRITE ERROR

Explanation: Tape cartridge drive detected an error when writing to a disk.

User response: Check the disk.

END OF RECORDED DATA. RESTORE NOT COMPLETE.

Explanation: The utility encountered an end of file while restoring data. This condition occurs when a save operation does not successfully complete.

User response: Check the tape cartridge.

ERROR TRYING TO OPEN THE TAPE UNIT

Explanation: The utility was unable to open the tape cartridge for processing.

User response: Check the system.

HEADER DATA EXPECTED AND NOT FOUND

Explanation: The tape cartridge drive was unable to find header information. An incorrect tape cartridge may have been inserted.

User response: Insert the correct tape cartridge.

INSUFFICIENT CONTIGUOUS SPACE IN VOLUME

Explanation: While executing either the RA or RM command option, the utility could not find enough contiguous space on the specified volume.

User response: Compress the specified volume, creating additional space.

INSUFFICIENT DIRECTORY SPACE

Explanation: While executing either the RA or RM command options, the utility detected a full disk directory.

User response: Either delete members from the volume to which the disk directory points or enlarge the directory.

INSUFFICIENT SPACE IN VOLUME

Explanation: During execution of either an RA or RM command option, the utility ran out of space on the volume to which the data was being restored.

User response: Either delete some members from the specified volume or increase the size of the specified volume.

INVALID DATE

Explanation: One or more incorrect characters were entered in response to a prompt for date information.

User response: Enter the date in the correct format.

INVALID DEVICE ADDRESS

Explanation: The device address is not correct. The device address must be within the range of 00 - FF

User response: Correct the device address.

INVALID TIME

Explanation: One or more incorrect characters were entered in response to a prompt for time information.

User response: Enter the time information in the correct format.

NO AVAILABLE SPACE ON TAPE

Explanation: A save operation requires a blank tape. The tape cartridge drive did not detect a blank tape.

User response: Erase the tape currently in the tape cartridge drive or insert a blank tape in the drive.

RESTORE ABORTED BY OPERATOR. RESTORE INCOMPLETE

Explanation: The utility issues this message whenever the operator enters ATTN or ABORT during execution of the restore operation.

User response: Enter the appropriate command option.

SAVENAME ALREADY EXISTS ON THIS TAPE

Explanation: A tape cartridge cannot have duplicate savenames.

User response: Assign a different savename.

SAVENAME DOES NOT MATCH THIS TAPE

Explanation: The savename specified by the command option does not match any savename on the tape cartridge in the addressed tape cartridge drive. The restore operation required another tape to complete the operation. The correct tape cartridge was not inserted into the drive.

User response: Insert the correct tape cartridge in the tape cartridge drive.

SAVENAME IS NOT A DEVICE SAVE

Explanation: The utility tried to use the RD command option to restore data from a tape that was not saved using the SD command option.

User response: Enter the appropriate Restore command option, based upon the command option used to save the data.

SAVENAME IS NOT A FILE SAVE

Explanation: The utility tried to use the RA or RM command options to restore a tape file that had been saved with either the SV or SD command options.

User response: Enter the appropriate Restore command option, based upon the command option used to save the data.

SAVENAME IS NOT A VOLUME SAVE

Explanation: The utility tried to use the RV command option to restore a tape file that had not been saved with the SV command option.

User response: Enter the appropriate Restore command option, based upon the command option used to save the data.

SAVENAME NOT FOUND

Explanation: The utility could not find the specified SAVENAME on the cartridge tape. Restore operations only.

User response: Enter the correct SAVENAME. Verify the cartridge tape is correct.

TAPE ADDRESS INCORRECT

Explanation: The EDX operating system could not find a cartridge tape drive at the specified address.

User response: Enter the correct cartridge tape drive address.

TAPE DIRECTORY CAPACITY EXCEEDED. FILE COUNT MUST NOT EXCEED XXX.

Explanation: The utility exceeded the tape capacity while trying to create a directory for the tape. Command options SA and SM generate this message.

User response: Do one, or all of the following to recover from the error:

- Delete some datasets from the volume.
- Use wild cards differently.
- Use the SV command option.

TAPE CARTRIDGE IS WRITE PROTECTED

Explanation: The tape cartridge drive does not permit writing on a write-protected tape cartridge.

User response: Insert a tape cartridge that is not write protected.

TAPE CONTAINS NO DATA

Explanation: The utility tried to restore data from a blank tape. The tape may have been previously erased.

User response: Insert the correct tape cartridge.

TAPE DATA SETS NOT ALLOWED

Explanation: The utility tried to execute a save or restore operation from the IBM tape unit.

User response: Execute save or restore operations only from the CDC tape unit.

TAPE ERROR

Explanation: The cartridge tape drive detected a tape error while neither reading or writing the tape. The error could have occurred during an erase operation.

User response: Try to either re-tension the tape or verify the tape.

TAPE UNIT IN USE BY ANOTHER PROGRAM

Explanation: Another program is currently using the specified cartridge tape drive. EDX may be accessing the tape drive from another partition.

User response: If EDX is not executing a program in another partition, re-IPL the system and retry the utility.

TAPE UNIT NOT RESPONDING

Explanation: The cartridge tape drive received an error when trying to get tape status.

User response: Verify that the cartridge tape was inserted correctly. Check cartridge tape drive installation. Cabling may be incorrect.

TYPE MISMATCH OF DATA SETS

Explanation: While executing either the RA or RM command option, the utility found the specified dataset in the disk directory, but the dataset was not the correct type of dataset (a dataset containing a program versus a dataset containing data).

User response: Delete the dataset on the disk and execute command option again (RA or RM).

UNRECOVERABLE TAPE READ ERROR

Explanation: The cartridge tape drive cannot read the data on the tape cartridge.

User response: Try to erase the tape, rewrite the data on the tape, and read the rewritten data. If this is unsuccessful, discard the tape cartridge.

UNRECOVERABLE TAPE WRITE ERROR

Explanation: The utility discovered an unrecoverable tape write error.

User response: Execute the SAVE command again. If the error recurs, discard the tape.

VOLUME EMPTY

Explanation: The utility detected no datasets on the specified volume. The SA, SM, and SV operations can generate this message..

User response: Specify the correct volume containing the datasets.

VOLUME NOT FOUND

Explanation: All SAVE and RESTORE operations require a volume name. The volume name entered for the SAVE or RESTORE operation was not found on the disk.

User response: Specify the correct volume name.

VOLUME NOT INITIALIZED. CANNOT SAVE.

Explanation: The utility saves only initialized volumes. The specified volume is not initialized. The volume must be initialized using the IBM utility $INITDSK.

User response: Refer to the IBM manuals explaining the disk initialization utility $INITDSK.

VOLUME TOO SMALL FOR RESTORE

Explanation: The utility tried to restore a volume to tape that required more space than was available on the tape. The utility issues the following record count messages:

```
TAPE RECORD COUNT = XXXX
DISK RECORD COUNT = XXXX
```

User response: Specify a tape with more available space.

WRONG TAPE SEQUENCE

Explanation: The utility is executing a restore operation, restoring a multiple-tape volume. The tape inserted into the tape cartridge drive is not the next tape in the sequence.

User response: Insert the correct tape into the tape cartridge drive.

Cambex

360 Second Avenue Waltham, Ma. 02154

LITHO IN U.S.A.